tehnoteka

https://tehnoteka.rs

Uputstvo za upotrebu (EN)

SENCOR paročistač SSC 6010WH

SENCOR

Tehnoteka je online destinacija za upoređivanje cena i karakteristika bele tehnike, potrošačke elektronike i IT uređaja kod trgovinskih lanaca i internet prodavnica u Srbiji. Naša stranica vam omogućava da istražite najnovije informacije, detaljne karakteristike i konkurentne cene proizvoda.

Posetite nas i uživajte u ekskluzivnom iskustvu pametne kupovine klikom na link:

https://tehnoteka.rs/p/sencor-parocistac-ssc-6010wh-akcija-cena/

SENCOR®

SSC 6010WH

EN

MULTIFUNCTIONAL STEAM MOP 2-IN-1

Translation of the original manual

SENCOR®

SSC 6010WH

A

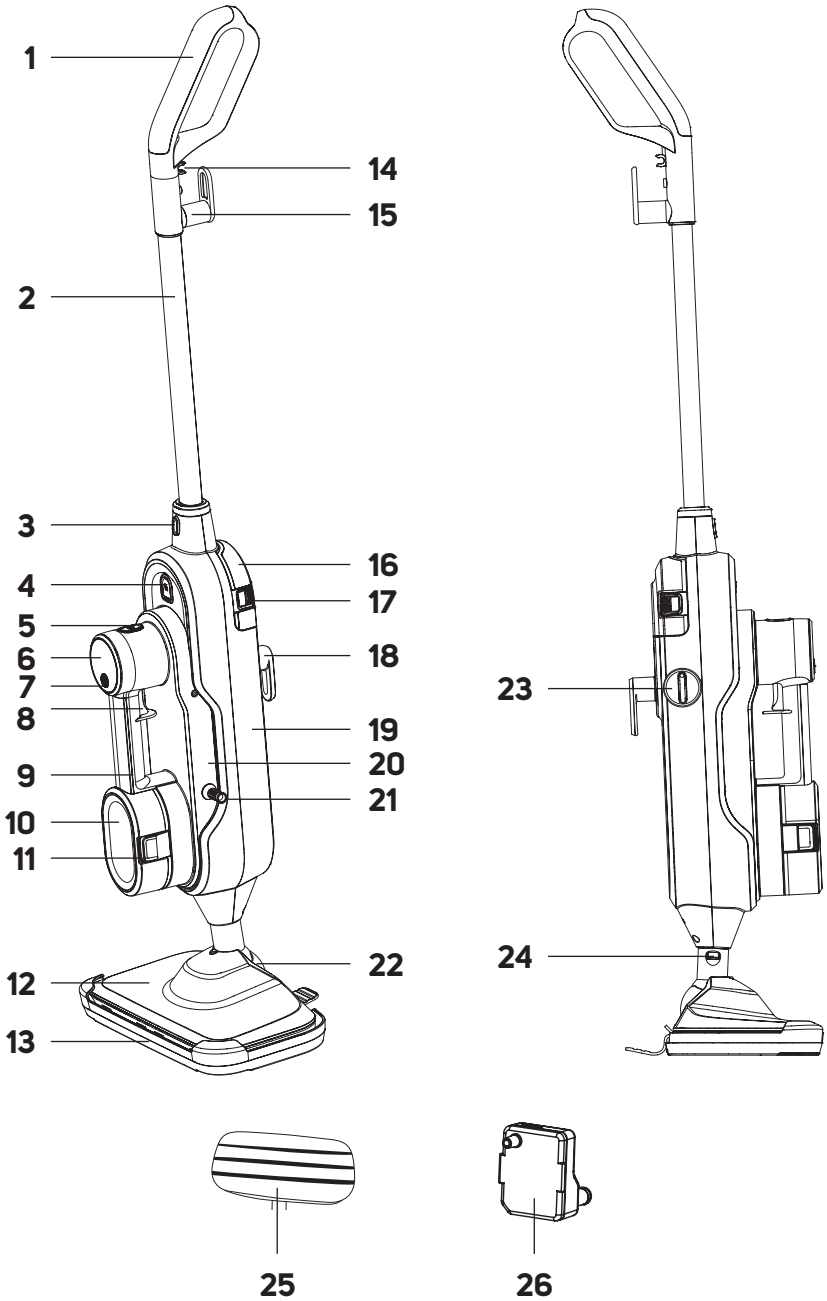

B

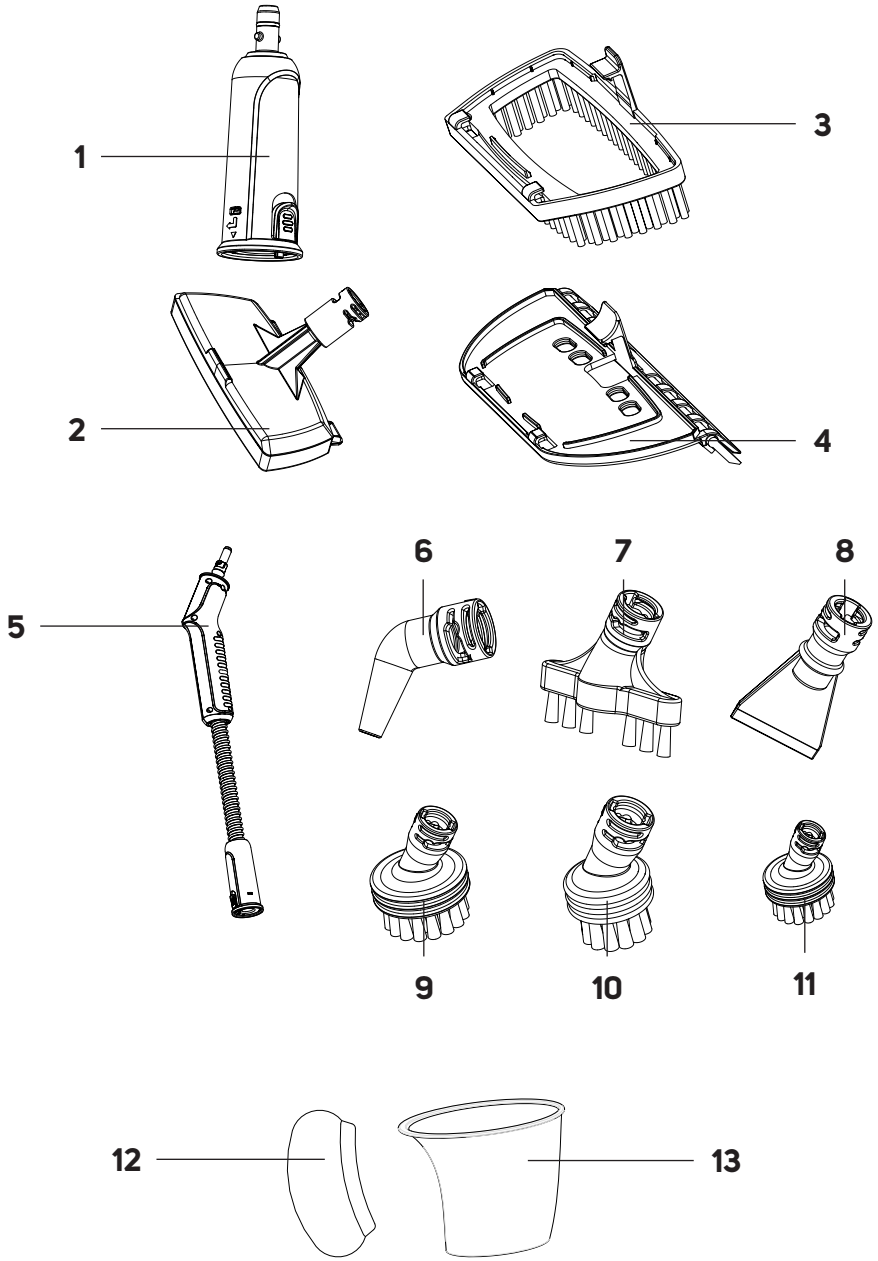

C

C1

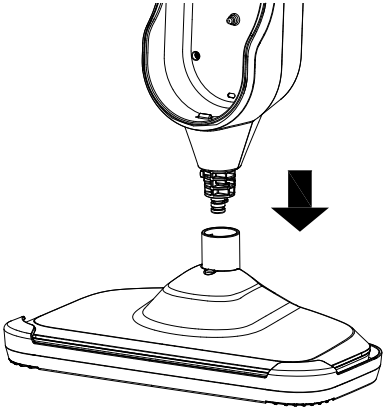

C2

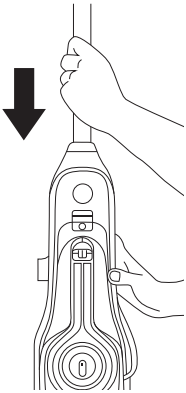

C3

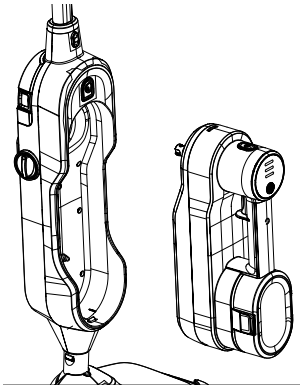

C4

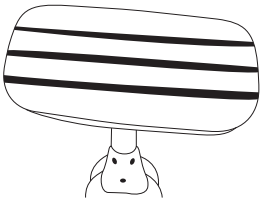

C5

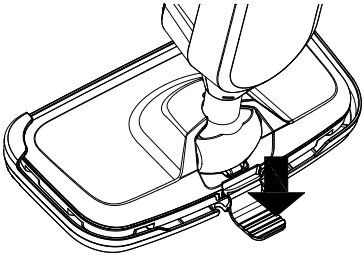

D

D1

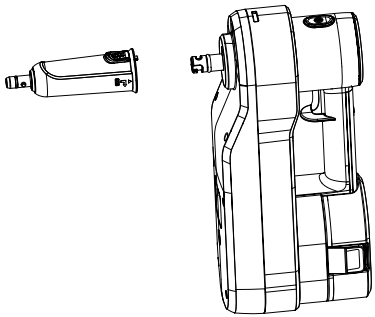

D2

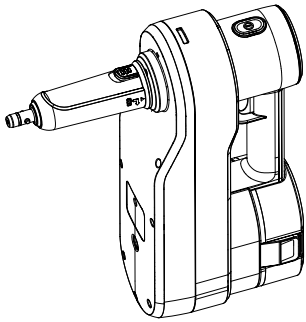

D3

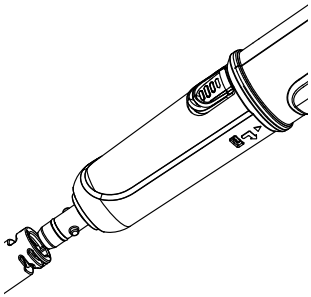

D4

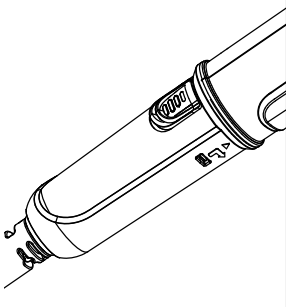

D5

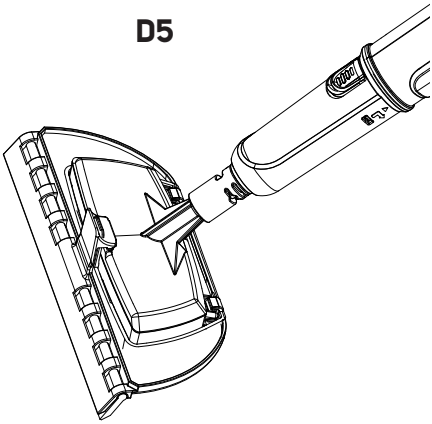

D

D6

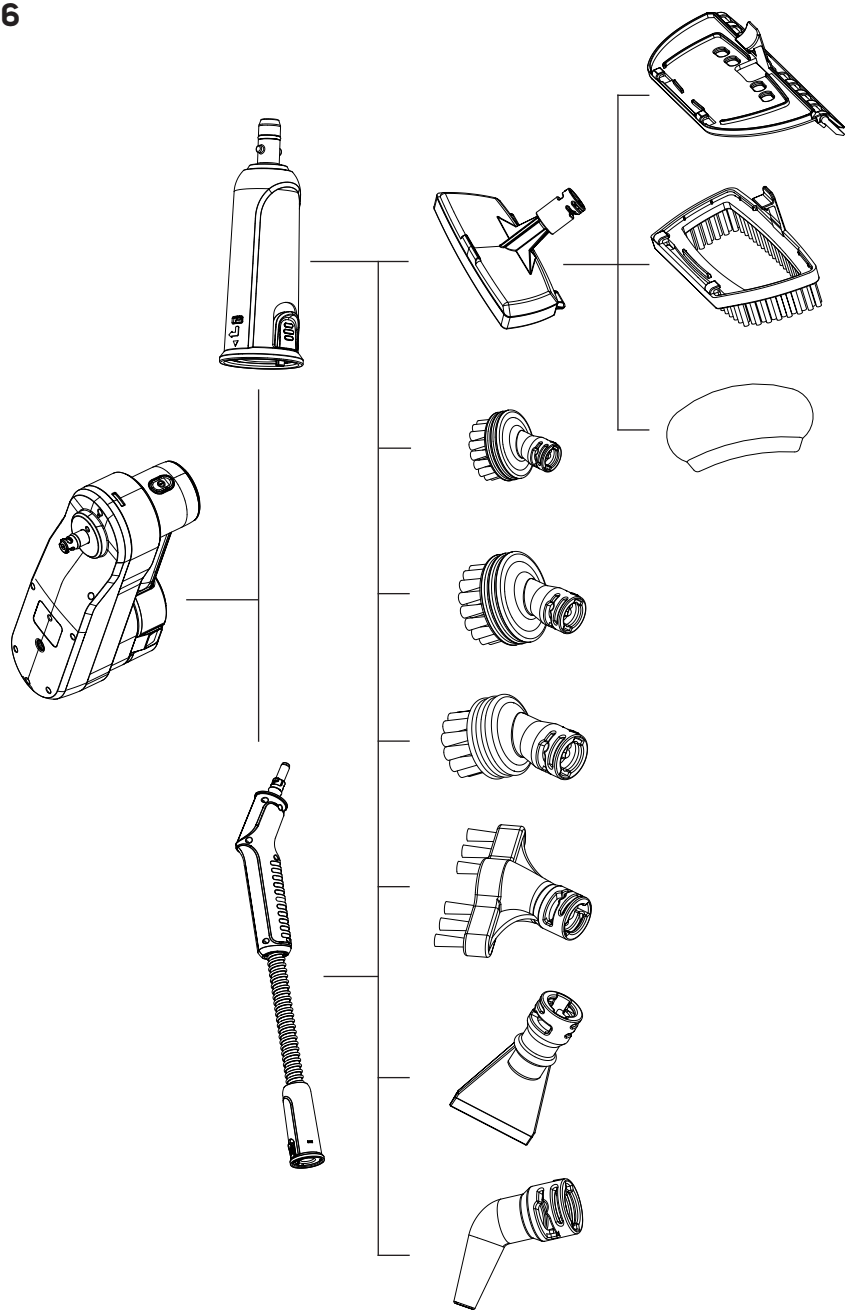

E

E1

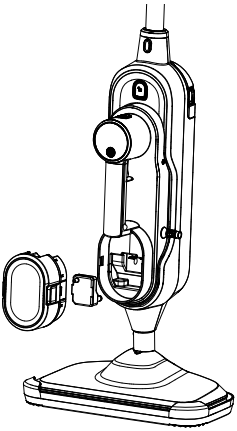

E2

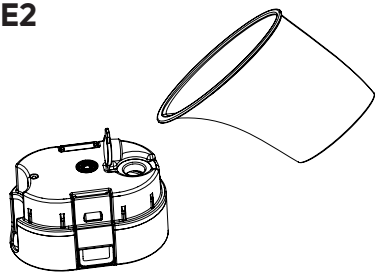

E3

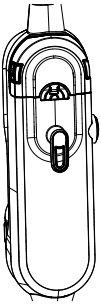

E4

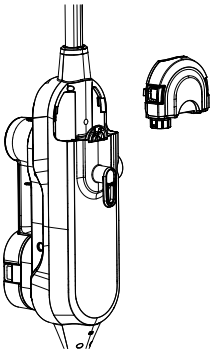

E5

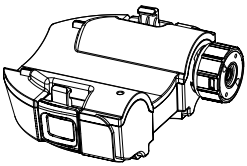

E6

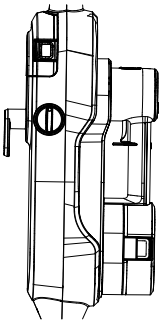

F

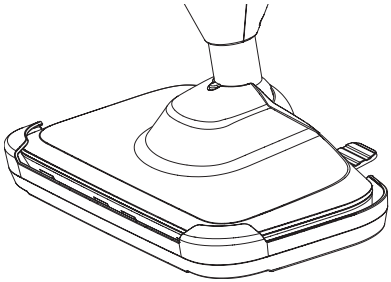

EN Multifunctional Steam Mop 2-in-1

Important Safety Instructions

READ CAREFULLY AND STORE FOR FUTURE USE.

- This appliance is not to be used by children.
- This appliance may be only used by persons with physical, sensory or mental impairments or by inexperienced persons provided they are properly supervised or have been informed about how to use of the product in a safe manner and understand the potential dangers.
- Children must not play with the appliance.
- Cleaning and maintenance must not be carried out by children. Keep the power cable out of reach of children.
- If the power cable is damaged, have it replaced in a professional service centre in order to prevent a dangerous situation. It is forbidden to use the appliance with the power cable damaged.
- Only use clean water in the appliance. Do not use any other liquids or add any detergents to the water.
- Pull the plug out of the socket before cleaning or maintaining the appliance.

WARNING: Danger of scalding.

Copyright © 2024, Fast ČR, a.s.

- Liquid or steam must not flow towards equipment containing electrical components, such as the interior of the oven.
- The filling hole must not be opened during use. Follow the instructions for safe water container refilling in this manual.
- The appliance must not be left unattended while connected to the power supply.
- The appliance must not be used if it has fallen, there are visible signs of damage or leaks.
- Do not allow access to children if the appliance is live or cooling.

- This appliance is designed for use in households, offices and similar types of areas. Do not use in industrial surroundings.
- Do not expose the appliance to direct sunlight and do not place it near open fire or appliances that are a source of heat.
- Before connecting the plug of the power cord to a power socket, make sure that the nominal voltage listed on the mop's rating plate matches the electrical voltage of the power outlet.
- Make sure that the power cable does not touch hot surfaces or sharp objects. Position the cable so that it is not tripped over.
- Do not immerse the appliance, power cord or plug in water or other liquids or rinse them under running water.
- Before switching on the appliance, make sure it is correctly assembled.
- Make sure that the air outlet or suction opening is not blocked when the appliance is in operation.
- Do not point the steam dispenser at people, animals, other appliances, etc.
- Do not expose the appliance to dripping or spraying water.
- Always store indoors.
- Do not touch the appliance with wet hands.
- Do not use the appliance in an enclosed area filled with fumes released by oil paints, paint thinners, certain anti-moth substances, flammable dust or other explosive or toxic fumes.
- Do not use the appliance on leather, wax-polished furniture or floors, synthetic fabrics, velvet or other delicate steam-sensitive materials.
- Do not use the appliance to heat the room.
- Only use the accessories supplied with the appliance or recommended by the manufacturer. Use of other accessories may cause fire, electric shock or injury.
- Never fill the water tank with descaling, aromatic, alcohol or detergent as this may damage it.
- Do not use the appliance to remove:
  - smouldering cigarettes, burning objects, matches or hot ashes;
  - flammable or volatile substances;
  - sharp objects such as shards, needles, pins, etc;
  - flour, plaster, cement and other building materials;
- Always switch off the appliance and unplug the power cord from the mains socket after use, before cleaning or maintenance.
- Disconnect the power cord from the socket by pulling the plug, not the cord. Otherwise, damage to the power cord or the socket may occur.
- Do not use the appliance if it is not working correctly, if it has been damaged or has been submerged in water. Do not repair or modify the appliance yourself. All repairs should be carried out by an authorised service centre. Tampering with the appliance may result in the loss of your legal rights regarding faulty performance or warranty for quality.

Copyright © 2024, Fast ČR, a.s.

EN Multifunctional Steam Mop 2-in-1

User Manual

- Thank you for purchasing our SENCOR product; we hope it will serve to your satisfaction.
- Before using this appliance, please familiarise yourself with the user manual, even if you are already familiar with using similar types of appliances. Use the appliance only as described in this user manual. Keep the manual for future reference.
- It is recommended to keep the original packaging, packing material, receipt and confirmation of the extent of the seller's liability or warranty certificate at least for the duration of the legal right of defective performance or quality guarantee. When transporting the appliance, we recommend packaging it again in the original box provided by the manufacturer.

DESCRIPTION OF THE MOP

A1 Handle
A2 Mop bar
A3 Bar release button
A4 Hand-held unit release button
A5 Power on/off button
A6 Steam intensity indicator lights
A7 Button to adjust steam intensity
A8 Power switch
A9 Hand-held unit handle
A10 Clean water tank
A11 Buttons to release the clean water tank (located on both sides)
A12 Mop nozzle
A13 Carpet attachment
A14 Plug attachment holder
A15 Upper cable winding hook
A16 Detergent tank
A17 Detergent tank release buttons (located on both sides)
A18 Lower cable winding hook
A19 Mop body
A20 Hand-held unit
A21 Power cord
A22 Flexible joint
A23 Detergent dosing regulator
A24 Button to release the mop nozzle
A25 Mop sleeve
A26 Lime scale filter

DESCRIPTION OF ACCESSORIES

B1 Tailpiece for attachments
B2 Small flat attachment
B3 Brush attachment
B4 Window attachment
B5 Hose with tailpiece for connecting attachments
B6 Narrow nozzle
B7 Joint brush
B8 Squeegee
B9 Round brush with plastic bristles
B10 Round brush with metallic bristles
B11 Round brush with plastic bristles (small)
B12 Small mop sleeve
B13 Measuring cup

BEFORE FIRST USE

- Before first use, remove the mop and its accessories form the packaging and discard all promotional labels and tags. Check that neither the mop nor any of its components is damaged.

PURPOSE OF USE

- The steam mop is designed to clean smooth floor coverings, low-pile carpets, mats with steam. The hand-held unit with extensions and accessories is designed to clean tiles, joints in the bathroom or in the kitchen, to clean oven grates, windows and doors, etc.
- **Folded steam mop with a mop sleeve** – suitable for cleaning smooth floor coverings, tiles, etc.
- **Folded steam mop with a mop sleeve and a carpet attachment** – suitable for cleaning carpets with a low pile, mats, runners, etc.
- **Hand-held unit with a small flat attachment and a brush attachment** – suitable for cleaning curtains, drapes, hanging clothes, etc. Before use, always check the symbols on the fabric label to ensure that steam steaming is suitable for the fabric type.
- **Hand-held unit with a small flat attachment and a window adapter** – suitable for cleaning windows, glass door panels, mirrors, etc.
- **Hand-held unit with a small flat attachment and a small mop sleeve** – suitable for cleaning smooth surfaces, e.g. kitchen units, table tops, etc., which can be cleaned with steam.
- **Hand-held unit with narrow nozzle** – suitable for cleaning hard to reach places and corners.
- **Hand-held unit with a joint brush** – suitable for cleaning tile joints.
- **Hand-held unit with squeegee** – suitable for removing dirt and cleaning smooth surfaces, dishes, etc.
- **Hand-held unit with round brush with plastic bristles** – suitable for cleaning tiles, washbasin, sink, bathtub, toilet, etc.
- **Hand-held unit with round brush with metal bristles** – suitable for removing dirt and cleaning oven grates, pans, etc. Before use, always check that steam steaming and using metal bristles are suitable for the type of surface, so as not to scratch it.
- **Hose** – allows you to extend the range when cleaning.

ASSEMBLY AND LAYOUT OF THE MOP

Warning:
Before assembling or disassembling the mop, always make sure that it is switched off and the power plug is disconnected from the mains socket.

Assembling the Mop

1. Insert the end of the mop body into the hole in the upper part of the flexible joint of the mop nozzle (see Figure **C1**). Press gently until you hear a click. This indicates proper securing.
2. Insert the handle bar into the hole at the top of the motor unit (see Figure **C2**). Press gently until you hear a click. This indicates proper securing.
3. Place the hand unit, if removed, against the body of the mop and push the hand unit slightly into the body of the mop until you hear a click (see Figure **C3**). This indicates proper securing.
4. Put the mop sleeve on the bottom of the mop nozzle (see figure **C4**). The mop sleeve is easily attached using a Velcro fastener.
5. If you are going to use a steam mop to clean the carpet, put the attachment on the carpets. Insert the front of the mop nozzle from above into the holder and then push down on the back of the mop nozzle until you hear a click.

Disassembling the Mop

1. If the carpet attachment is fitted, remove it by stepping lightly on the tab at the back of the attachment (see Figure **C5**) and lifting the mop upwards.
2. Remove the mop sleeve from the mop head.
3. Grasp the hand unit by the handle with one hand and press the hand unit release button with the other. Carefully pull the hand unit out of the mop body.
4. Grasp the handle bar with one hand and press the handle bar release button with the other hand. Pull out the handle bar from the mop body in the upward direction.
5. Press the button to release the mop nozzle with one hand and pull the mop body out of the flexible joint with the other.

Copyright © 2024, Fast ČR, a.s.

ASSEMBLING AND DISASSEMBLING THE HAND-HELD UNIT WITH ACCESSORIES

Warning:
Before assembling or disassembling the mop and accessories, always make sure the mop is switched off and the power cord plug is disconnected from the mains socket.

- The supplied accessories are connected to the hand-held unit.

In order to use the hand-held unit with accessories and attachments, it is always necessary to attach the tailpiece (**B1**). This should also be used when connecting the hose to the hand-held unit.

Assembling the Hand-held Unit with Accessories

1. Remove the hand-held unit from the body of the mop. Grasp the hand unit by the handle with one hand and press the hand unit release button with the other. Carefully pull the hand unit out of the mop body.
2. Attach the tailpiece to the output connector at the back of the hand-held unit so that the arrow on the tailpiece aligns with the arrow on the hand-held unit (see Figure **D1**).
3. Turn the tailpiece clockwise until you hear a click and the lock to remove the tailpiece is aligned with the arrow on the hand-held unit (see Figure **D2**).
4. Fit the selected attachment or accessory onto the tailpiece end so that the tabs at the tailpiece end are aligned with the cut-outs in the attachment or accessory attachment (see Figures **D3**).
5. Turn the attachment or accessory clockwise until you feel resistance (see Figure **D4**).

- When assembling a hand-held unit with a hose, first attach the hose end to the outlet connector. The attaching procedure is the same as in point 2 above. Then attach the tailpiece and the accessory or attachment as described above to the free end of the hose.

Layout of the Hand-held Unit with Accessories

1. Turn the attachment or accessory counterclockwise until you feel resistance and remove the attachment or accessory from the end of the tailpiece.
2. Pull the lock on the tailpiece away from the hand-held unit and turn the tailpiece counterclockwise until the arrow on the tailpiece is aligned with the arrow on the hand-held unit.
3. Pull the tailpiece away from the output connector.

Note:
When connecting or disconnecting the hose, follow the same procedure.

- **FOR OPTIONS ON HOW TO COMBINE THE ACCESSORIES WITH EACH OTHER, SEE FIGURE D6.**

PREPARATION FOR USE

Filling the Water Tank

1. Press the clean water tank release buttons to release it and pull it out of the hand-held unit body (see figure **E1**).
2. Release the stopper and pour clean water into the tank (see Figure **E2**).
3. Close the stopper properly and insert the tank back into the hand-held unit.

- It is possible to use tap water. However, we recommend replacing the anti-scale filter after approximately 160 hours of use or when the filter turns yellow.

Filling the Detergent Tank

1. Press the detergent tank release buttons (see Figure **E3**) to release it and remove it from the mop body (see Figure **E4**).
2. Turn the tank lid to release it and remove it (see Figure **E5**).
3. Pour detergent into the tank and add water.
4. Replace the lid and twist the cap to secure it. Insert the tank back into the mop body.
5. Set the intensity of detergent release with the detergent dosing regulator (see Figure **E6**).

- Use cleaning agents with a low foaming effect, without bleaching agents and without chlorine.

USE OF STEAM MOP

- Check that the steam mop is folded according to its intended use; that the water tank and detergent tank are full.
- We recommend slightly moistening the mop sleeve in clean water and wringing it thoroughly before putting it on the mop head.
- The area you will be cleaning with a steam mop should first be properly vacuumed or swept with a broom to remove coarse dirt that could damage the floor covering or carpet.
- The use of a steam mop on waxed or some non-waxed floors may lead to a decrease in gloss.
- We recommend checking with the manufacturer of the floor covering, carpet, etc. whether it is possible to clean it with a steam mop.

Connecting the Mop to the Mains

- Fully unwind the power cord. Insert the plug into a properly grounded power outlet.

Using the Steam Mop

1. Press the on/off button to switch the steam mop on.
2. One steam intensity indicator will start to flash.
3. When the light comes on, use the steam intensity button to set the steam intensity level:
   Low intensity (the upper indicator light is on)
   Medium intensity (the middle indicator light is on)
   High intensity (the bottom indicator light on)
4. After adjusting the steam intensity, you will hear a clicking sound and after a while the steam dispensing will start.
5. Move the mop slowly back and forth to clean the floor covering.
6. When you have finished cleaning, press the on/off button to switch the steam mop off. Disconnect the power cord from the power socket.
7. Put the steam mop in the parking position and wait until it has cooled down before cleaning it.

Using the hand-held unit

1. Press the on/off button to switch the hand-held unit on.
2. One steam intensity indicator will start to flash.
3. When the light comes on, use the steam intensity button to set the steam intensity level:
   Low intensity (the upper indicator light is on)
   Medium intensity (the middle indicator light is on)
   High intensity (the bottom indicator light on)
4. After setting the steam intensity, you will hear a click sound.
5. Press the switch on the hand-held unit and steam will be dispensed.
6. When you have finished cleaning, press the on/off button to switch the hand-held unit off. Disconnect the power cord from the power socket.
7. Place the hand-held unit on a solid surface and wait for it to cool before cleaning it.

Warning:
HOT STEAM! Take extra care not to scald yourself with hot steam or hot parts of the steam mop, especially if you are using a hand-held unit with accessories.

Refilling the Water Tank

- If the water in the tank runs out during use, the steam intensity indicators will gradually turn on and the steam release will stop.
- Turn off the steam mop (hand-held unit) with the on/off button, wait for it to cool down a little, and add water to the tank following the instructions "**Filling the Water Tank**".

Parking Position

- Place the handle of the steam mop in an upright position so that the protrusion on the flexible joint fits into the notch in the mop head – see Figure **F**.
- The parking position serves to fix the steam mop in an upright position. The steam mop can thus stand alone without falling down.

Copyright © 2024, Fast ČR, a.s.

CLEANING AND MAINTENANCE

- Before cleaning, switch off the steam mop (hand-held unit) using the on/off button, unplug the power cord from the mains socket and allow the appliance to cool down completely.

Warning:
HOT STEAM! Take extra care not to scald yourself with hot steam or hot parts of the steam mop.

Warning:
To prevent the risk of electric shock, do not immerse the appliance, power cable, or plug into water or any other liquid.

Warning:
Do not use abrasive cleaning agents, solvents, etc. to clean any parts of the appliance that could damage the surface of the appliance. None of the components of this appliance is dishwasher safe.

Cleaning the Mop Sleeve

1. Remove the mop sleeve from the mop head.
2. Wash by hand in warm water with a little hand washing detergent.
3. Rinse in clean water and wring in hand. Allow to dry freely.

- **The mop sleeve is not intended to be washed in a washing machine or to be dried in a clothes dryer.**

Cleaning the Water Tank

1. Remove the water tank from the hand-held unit.
2. Loosen the stopper and pour off the remaining water.
3. Rinse the tank with clean water and leave the stopper open to allow the inside of the tank to dry out.
4. Then insert it back into the hand-held unit.

Cleaning the Detergent Tank

1. Remove the detergent tank from the steam mop.
2. Release the lid and pour out the remaining water.
3. Rinse the tank with clean water and leave the lid open to allow the inside of the tank to dry.
4. Then, reinsert it into the steam mop.

External Surface of the Steam Mop and Accessories

- Wipe the outer surface of the steam mop and accessories with a slightly damp cloth and wipe with a dry cloth.

Storage of the Steam Mop

- Put the steam mop in the parking position and wrap the power cord around the upper and lower hooks. Store the clean steam mop and accessories in a dry and well-ventilated place.

TECHNICAL SPECIFICATIONS

Rated voltage	220–240 V ~
Rated frequency	50–60 Hz
Rated power input	1,500 W
Length of the power cord	5 m
Water tank capacity	300 ml
Detergent tank capacity	150 ml
Heating time	approximately 30 s
Operating time	approx. 15 min.
Water resistance	IPX4

Text and technical specifications are subject to change.

INSTRUCTIONS AND INFORMATION ON DISPOSAL OF USED PACKAGING MATERIAL

Dispose of used packaging material at the location designated by the municipality for waste disposal.

DISPOSAL OF USED ELECTRICAL AND ELECTRONIC EQUIPMENT

This symbol on the products or accompanying documents indicates that used electrical and electronic products should not be disposed of with regular municipal waste. For proper disposal and recycling of these products, deliver them to designated collection points. Alternatively, in some European Union states or other European countries the products can be returned to the local retailer when buying an equivalent new product. By properly disposing of this product, you help preserve valuable natural resources and contribute to preventing potential negative impacts on the environment and human health resulting from improper waste disposal. For further details, contact your local authorities or the nearest collection point. Fines may be imposed for improper disposal of this type of waste in accordance with national regulations.

For Business Entities in European Union States

To dispose of electric or electronic equipment, request necessary information from your retailer or supplier.

Disposal in Other Countries Outside the European Union

This symbol is valid in the European Union. To dispose of this product elsewhere, request necessary information on the correct disposal method from local authorities or your retailer.

This product complies with all the essential requirements of the applicable EU directives.

FAST ČR, a.s.
U Sanitasu 1621
CZ-251 01 Říčany
www.sencor.eu

tehnoteka

https://tehnoteka.rs

Ovaj dokument je originalno proizveden i objavljen od strane proizvođača, brenda Sencor, i preuzet je sa njihove zvanične stranice. S obzirom na ovu činjenicu, Tehnoteka ističe da ne preuzima odgovornost za tačnost, celovitost ili pouzdanost informacija, podataka, mišljenja, saveta ili izjava sadržanih u ovom dokumentu.

Napominjemo da Tehnoteka nema ovlašćenje da izvrši bilo kakve izmene ili dopune na ovom dokumentu, stoga nismo odgovorni za eventualne greške, propuste ili netačnosti koje se mogu naći unutar njega. Tehnoteka ne odgovara za štetu nanesenu korisnicima pri upotrebi netačnih podataka. Ukoliko imate dodatna pitanja o proizvodu, ljubazno vas molimo da kontaktirate direktno proizvođača kako biste dobili sve detaljne informacije.

Za najnovije informacije o ceni, dostupnim akcijama i tehničkim karakteristikama proizvoda koji se pominje u ovom dokumentu, molimo posetite našu stranicu klikom na sledeći link:

https://tehnoteka.rs/p/sencor-parocistac-ssc-6010wh-akcija-cena/