tehnoteka

https://tehnoteka.rs

Uputstvo za upotrebu (EN)

NZXT kućište H6 Flow (CC-H61FB-R1) crno

NZXT

Tehnoteka je online destinacija za upoređivanje cena i karakteristika bele tehnike, potrošačke elektronike i IT uređaja kod trgovinskih lanaca i internet prodavnica u Srbiji. Naša stranica vam omogućava da istražite najnovije informacije, detaljne karakteristike i konkurentne cene proizvoda.

Posetite nas i uživajte u ekskluzivnom iskustvu pametne kupovine klikom na link:

https://tehnoteka.rs/p/nzxt-kuciste-h6-flow-cc-h61fb-r1-crno-akcija-cena/

NZXT

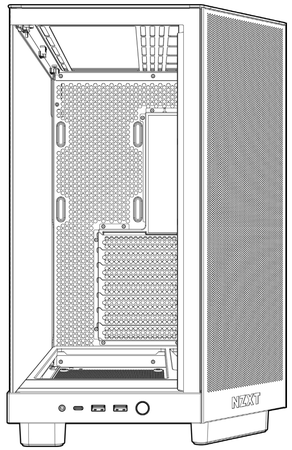

H6 Series

COMPACT DUAL-CHAMBER MID-TOWER AIRFLOW CASE

EXPLODED VIEW

VISTA EXPLOSIONADA
VUE ÉCLATÉE
EXPLOSIONSDARSTELLUNG
VEDUTA IN ESPLOSO
VISTA EXPLODIDA
확대도
展開図
部件分解图
部件分解圖

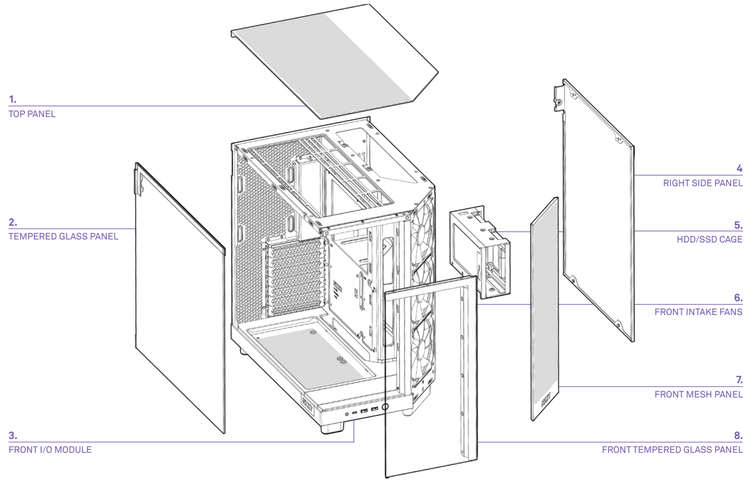

1. Top Panel	1. Abdeckung oben	1. 상단 패널	1. 頂蓋
2. Tempered Glass Panel	2. Linke Hartglasblende	2. 좌측 강화 유리 패널	2. 左側強化玻璃面板
3. Front I/O Module	3. E/A-Modul an der Vorderseite	3. 전면 I/O 모듈	3. 前方 I/O 模組
4. Right Side Panel	4. Rechte Blende	4. 우측 사이드 패널	4. 右側板
5. HDD/SSD Cage	5. Festplatteneinsatz	5. HDD/SSD 트레이	5. 硬盤/SSD架
6. Front Intake Fans	6. Lüfter für Lufteinlass an Vorderseite	6. 전면 흡기팬	6. 前方進風風扇
7. Front Mesh Panel	7. Mesh-Einsatz vorne	7. 전면 메쉬 패널	7. 前網板
8. Front Tempered Glass Panel	8. Frontstahlblende	8. 전면 강철 패널	8. 前部強化玻璃面板

1. Panel superior	1. Pannello superiore	1. トップパネル	
2. Panel de cristal templado izquierdo	2. Pannello laterale sinistro di vetro temperato	2. 左強化ガラスパネル	
3. Módulo de E/S frontal	3. Modulo I/O anteriore	3. フロント I/O モジュール	
4. Panel lateral derecho	4. Pannello laterale destro	4. 右サイドパネル	
5. Compartimento do disco rígido/SSD	5. Cassetto HDD/SSD	5. ハードドライブ/SSDトレイ	
6. Ventilador de entrada frontal	6. Ventola di ingresso frontali	6. フロント吸入ファン	
7. Panel de malla frontal	7. Pannello frontale in rete	7. フロントメッシュパネル	
8. Panel de acero frontal	8. Pannello frontale di acciaio	8. フロントスチール パネル	

1. Panneau supérieur	1. Painel superior	1. 顶部面板	
2. Panneau gauche en verre trempé	2. Painel esquerdo em vidro temperado	2. 左边钢化玻璃面板	
3. Module avant E/S	3. Módulo E/S frontal	3. 前部 I/O 模块	
4. Panneau latéral droit	4. Painel lateral direito	4. 右边面板	
5. Plateau pour disque dur/SSD	5. Bandeja de unidad de disco duro/SSD	5. 硬盘/SSD托架	
6. Ventilateur d'admission avant	6. Frente e entrada das ventoinha	6. 前进气扇	
7. Panneau avant en filet	7. Painel de malha frontal	7. 前网板	
8. Panneau avant en acier	8. Painel de aço frontal	8. 前部钢化玻璃面板	

CLEARANCES AND SPECIFICATIONS

MEDIDAS Y ESPECIFICACIONES
DÉGAGEMENTS ET SPÉCIFICATIONS
ABSTÄNDE UND TECHNISCHE DATEN
SPAZI NECESSARI E SPECIFICHE
DIMENSÕES E ESPECIFICAÇÕES
간격과 규격
空間と仕様
间距与规格
間距與規格

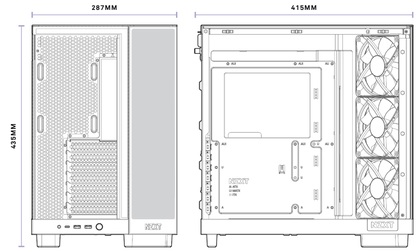

Motherboard Support	ATX, Micro-ATX and Mini-ITX
2.5" SSD Support	2
3.5" HDD Support	1
Expansion Slots	7
Cable Management	91mm
GPU Length Clearance	365mm
CPU Cooler Clearance	163mm
PSU Clearance	200mm
Top Radiator	30mm

Placas base admitidas	ATX, Micro-ATX y Mini-ITX
Unidad de estado sólido de 2,5"	2
Unidad de disco duro de 3,5"	1
Ranuras de expansión	7
Administración de los cables	91mm
Distancia de seguridad para GPU	365mm
Disipador de la CPU	163mm
Distancia de seguridad para PSU	200mm
Radiador superior	30mm

Cartes mère prises en charge	ATX, MircATX, MiniITX
SSD 2,5"	2
Disques durs 3,5"	1
Fentes d'expansion	7
Gestion du câblage	91mm
Dégagement GPU	365mm
Refroidisseur du processeur	163mm
Dégagement PSU	200mm
Radiateur du dessus	30mm

마더보드 지원	ATX, Micro ATX, Mini ITX
2.5" SSD	2
3.5" HDD	1
확장 슬롯	7
케이블 정리	91mm
GPU 간격	365mm
CPU 쿨러	163mm
PSU 간격	200mm
상단 라디에이터	30mm

Motherboard-Unterstützung	ATX, Micro-ATX, Mini-ITX
2,5-Zoll-SSD	2
3,5-Zoll-Festplatte	1
Erweiterungssteckplätze	7
Kabelverwaltung	91mm
GPU-Abstand	365mm
CPU-Kühler	163mm
PSU-Abstand	200mm
Kühler Oberseite	30mm

マザーボードサポート	ATX, MicroATX, MiniITX
2.5"SSDサポート	2
3.5"HDDサポート	1
エクスパンションスロット	7
ケーブルの管理	91mm
GPUクリアランス	365mm
CPUクーラークリアランス	163mm
PSUクリアランス	200mm
トップラジエータ	30mm

Scheda madre supportata	ATX, Micro ATX, Mini ITX
SDD 2.5"	2
HDD 3.5"	1
Alloggi d'espansione	7
Gestione dei cavi	91mm
Spazio necessario alla GPU	365mm
Dispersore di calore CPU	163mm
Spazio necessario alla PSU	200mm
Radiatore superiore	30mm

主板支持	ATX, Micro ATX, Mini ITX
2.5"SSD支持	2
3.5"HDD支持	1
扩充槽	7
线缆管理	91mm
GPU 间距	365mm
CPU 散热器间距	163mm
PSU 间距	200mm
顶部散热器	30mm

Placa-principais suportadas	ATX, Micro-ATX, Mini-ITX
SSD de 2,5"	2
HDD de 3,5"	1
Ranhuras de expansão	7
Gestão de cabos	91mm
Folga para a GPU	365mm
Dissipador de CPU	163mm
Folga para a PSU	200mm
Radiador superior	30mm

主板支援	ATX, Micro ATX, Mini ITX
2.5"SSD支援	2
3.5"HDD支援	1
擴充槽	7
線纜管理	91mm
GPU 間距	365mm
CPU 散熱器間距	163mm
PSU 間距	200mm
頂部散熱排	30mm

ACCESSORY BOX

CAJA DE ACCESORIOS
BOITE D'ACCESSOIRES
ZUBEHÖRSET
SCATOLA DEGLI ACCESSORI
CAIXA DE ACESSÓRIOS
악세사리 박스
部品箱（説明書入り）
配件盒
零件盒

A Hexagon Screw 6-32 x 6mm
x4

B Screw 6-32 x 5mm
x17

C Screw M3 x 5mm
x16

D Screw KB5 x 10mm
x12

E Flat head CB5 x 13.5mm
x8

F Standoff 6-32 x 6+4mm
x1

G Standoff Wrench
x1

H Cable Ties
x10

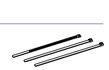

A . Hexagon Screw 6-32 X 6mm	Power supply installation
B . Screw 6-32 X 5mm	Motherboard installation, 3.5 hard drive installation
C . Screw M3 X 5mm	2.5 hard drive installation
D . Screw KB5 X 10mm	Fan installation
E . Flat head CB5 x 13.5mm	Fan installation
F . Standoff 6-32 x 6+4mm	Motherboard installation
G . Standoff Wrench	Motherboard installation
H . Cable Ties	Cable managment

A . Tornillo hexagonal de 6-32 x 6 mm	Instalación de la fuente de alimentación
B . Tornillo de 6-32 x 5 mm	Instalación de la placa base e instalación de la unidad de disco duro de 3,5"
C . Tornillo M3 x 5mm	Instalación de la unidad de disco duro de 2,5"
D . Tornillo KB5 x 10 mm	Instalación del ventilador
E . Tornillo CB5 x 13.5 mm	Instalación del ventilador
F . Separador 6-32 x 6,5 + 4 mm	Instalación de la placa base
G . Llave para separadores	Instalación de la placa base
H . Brida para cables	Administración de los cables

A . Vis hexagonale 6-32 x 6 mm	Installation de l'alimentation électrique
B . Vis 6-32 x 5 mm	Installation de la carte mère, installation du disque dur 3,5''
C . Vis M3 x 5 mm	Installation du disque dur 2,5''
D . Vis KB5 x 10 mm	Installation du ventilateur
E . Vis KB5 x CB5 x 13.5 mm	Installation du ventilateur
F . Entretoise 6-32 x 6,5 + 4 mm	Installation de la carte mère
G . Clé pour entretoise	Installation de la carte mère
H . Attache-câble	Gestion du câblage

A . Sechskantschraube 6 – 32 x 6 mm	Netzteilinstallation
B . Schraube 6 – 32 x 5 mm	Motherboard-Installation, 3,5-Zoll-Festplatteninstallation
C . Schraube M3 x 5 mm	2,5-Zoll-Festplatteninstallation
D . Schraube KB5 x 10 mm	Lüfterinstallation
E . Schraube CB5 x 13.5 mm	Lüfterinstallation
F . Abstandhalter 6 – 32 x 6,5 + 4 mm	Motherboard-Installation
G . Abstandshalter-Schlüssel	Motherboard-Installation
H . Kabelbinder	Kabelverwaltung

A . Sechskantschraube 6 – 32 x 6 mm	Netzteilinstallation
B . Schraube 6 – 32 x 5 mm	Motherboard-Installation, 3,5-Zoll-Festplatteninstallation
C . Schraube M3 x 5 mm	2,5-Zoll-Festplatteninstallation
D . Schraube KB5 x 10 mm	Lüfterinstallation
E . Schraube CB5 x 13.5 mm	Lüfterinstallation
F . Abstandhalter 6 – 32 x 6,5 + 4 mm	Motherboard-Installation
G . Abstandshalter-Schlüssel	Motherboard-Installation
H . Kabelbinder	Kabelverwaltung

A . Parafusos hexagonal 6-32 x 6 mm	Instalação da fonte de alimentação
B . Parafusos 6-32 x 5 mm	Instalação da placa principal, instalação da unidade de 3,5"
C . Parafusos M3 x 5 mm	Instalação da unidade de 2,5"
D . Parafusos KB5 x 10 mm	Instalação da ventoinha
E . Parafusos CB5 x 13.5 mm	Instalação da ventoinha
F . Separadores 6-32 x 6,5+4 mm	Instalação da placa principal
G . Chave para separador	Instalação da placa principal
H . Braçadeira para cabos	Gestão de cabos

A . 육각나사 6-32 x 6mm	전원공급장치 설치
B . 나사 6-32 x 5mm	마더보드 설치, 3.5 하드 드라이브 설치
C . 나사 M3 x 5mm	2.5 하드 드라이브 설치
D . 나사 KB5 x 10mm	팬 설치
E . 나사 CB5 x 13.5mm	팬 설치
F . 스탠드오프 6-32 x 6.5+4mm	마더보드 설치
G . 스탠드오프 렌치	마더보드 설치
H . 케이블 타이	케이블 정리

A . 6角ネジ6-32 x 6mm	電源装着用
B . ネジ6-32 x 5mm	マザーボード装着, 3.5HDD装着用
C . ネジ M3 x 5mm	2.5HDD装着
D . ネジKB5 x 10mm	ファン装着用
E . ネジCB5 x 13.5mm	ファン装着用
F . スタンドオフ 6-32 x 6.5+4mm	マザーボード装着用
G . スタンドオフ レンチ	マザーボード装着用
H . ケーブルタイ	ケーブル整理用

A . 六角螺丝 6-32 x 6mm	安装电源
B . 螺丝 6-32 x 5mm	主板安装, 3.5 硬盘安装
C . 螺丝 M3 x 5mm	2.5 硬盘安装
D . 螺丝 KB5 x 10mm	安装风扇
E . 螺丝 CB5 x 13.5mm	安装风扇
F . 垫片 6-32 x 6.5+4mm	主板安装
G . 垫片套筒	主板安装
H . 束线带	线缆管理

A . 六角螺丝 6-32 x 6mm	安裝電源
B . 螺丝 6-32 x 5mm	主機板安裝, 3.5 硬碟安裝
C . 螺丝 M3 x 5mm	2.5 硬碟安裝
D . 螺丝 KB5 x 10mm	安裝風扇
E . 螺丝 CB5 x 13.5mm	安裝風扇
F . 垫片 6-32 x 6.5+4mm	主板安裝
G . 垫片套筒	主板安裝
H . 束線帶	線纜管理

CABLE CONNECTIONS

DISCO DE ADMINISTRACIÓN DE CABLES
CONNEXIONS DES CÂBLES
KABELVERBINDUNGEN
COLLEGAMENTI DEI CAVI
LIGAÇÕES DE CABOS
케이블 연결
ケーブル接続
线缆连接
線路連接

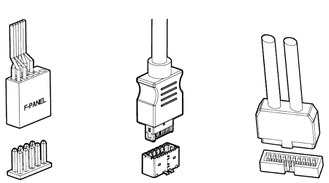

FOR INTEL STANDARD F_PANEL HEADER

USB 3.2 GEN 2 TYPE-C

USB 3.2 GEN 1 TYPE-A

HD AUDIO

4-PIN PWM FAN

5V ARGB (FOR FLOW RGB ONLY)

BUTTONS AND I/O

BOTONES Y E/S
BOUTONS ET E/S
TASTEN UND E/A
PULSANTI E I/O
BOTÕES E E/S
버튼 및 I/O
ボタンおよび I/O
按钮和 I/O
按鈕和 I/O

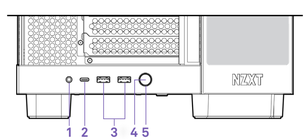

1 . Headset Jack	1 . Ingresso Cuffie	1 . 耳机麦克风插孔
2 . USB 3.2 Gen 2 Type-C	2 . USB 3.2 Gen2 Type-C	2 . USB 3.2 Gen2 Type-C
3 . USB 3.2 Gen 1 Type-A	3 . USB 3.2 Gen1 Type-A	3 . USB 3.2 Gen1 Type-A
4 . Power Button	4 . Interruttore d'alimentazione	4 . 电源开关
5 . Power LED	5 . LED alimentazione	5 . 电源LED

1 . Jack para auriculares	1 . Jack de fone de ouvido	1 . 耳機麥克風插孔
2 . USB 3.2 Gen2 Type-C	2 . USB 3.2 Gen2 Type-C	2 . USB 3.2 Gen2 Type-C
3 . USB 3.2 Gen1 Type-A	3 . USB 3.2 Gen1 Type-A	3 . USB 3.2 Gen1 Type-A
4 . Interruptor de encendido	4 . Interruptor de alimentação	4 . 電源開關
5 . LED de alimentación	5 . LED de alimentação	5 . 電源LED

1 . Prise Casque	1 . 헤드셋 잭	
2 . USB 3.2 Gen2 Type-C	2 . USB 3.2 Gen2 Type-C	
3 . USB 3.2 Gen1 Type-A	3 . USB 3.2 Gen1 Type-A	
4 . Interrupteur marche/arrêt	4 . 전원 스위치	
5 . Témoin d'alimentation	5 . 전원 LED	

1 . Headset-Buchse	1 . ヘッドセットジャック	
2 . USB 3.2 Gen2 Type-C	2 . USB 3.2 Gen2 Type-C	
3 . USB 3.2 Gen1 Type-A	3 . USB 3.2 Gen1 Type-A	
4 . Netzschalter	4 . 電源スイッチ	
5 . Betriebs-LED	5 . パワー LED	

CABLE MANAGEMENT SYSTEM

SISTEMA DE GESTIÓN DE CABLES
SYSTÈME DE CÂBLAGE
KABELMANAGEMENTSYSTEM
SISTEMA DI GESTIONE DEI CAVI
SISTEMA DE GERENCIAMENTO DE CABOS
케이블 관리 시스템
ケーブルマネジメントシステム
理线管理系统
整線管理系統

- 8-PIN CPU POWER CABLE
- FAN CABLE CHANNEL

- 24-PIN MOTHERBOARD POWER CABLE
- GPU POWER CABLE
- SATA CABLE
- FAN CABLE CHANNEL

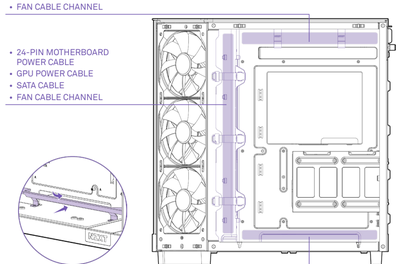

- MOTHERBOARD I/O OPENING
- BOTTOM FAN CABLE OPENING

PANEL REMOVAL

EXTRACCIÓN DE PANEL
RETRAIT DU PANNEAU
BLENDE ENTFERNEN
RIMOZIONE DEL PANNELLO
REMOÇÃO DOS PAINÉIS
패널 제거
パネルの取り外し
卸下面板
移除面板

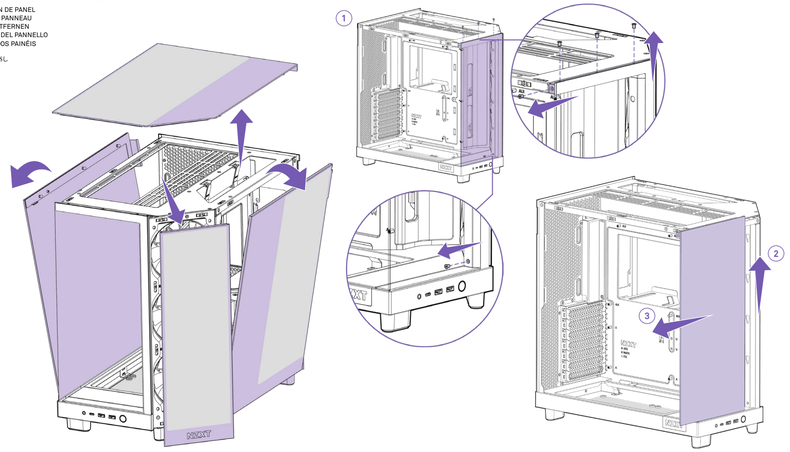

MOTHERBOARD INSTALLATION

INSTALACIÓN DE LA PLACA BASE
INSTALLATION DE LA HDD/SSD
INSTALLATION DER HAUPTPLATINE
INSTALLAZIONE DELLA SCHEDA MADRE
INSTALAÇÃO DA PLACA PRINCIPAL
마더보드 설치
マザーボードの装着
主板安装
主機板安裝

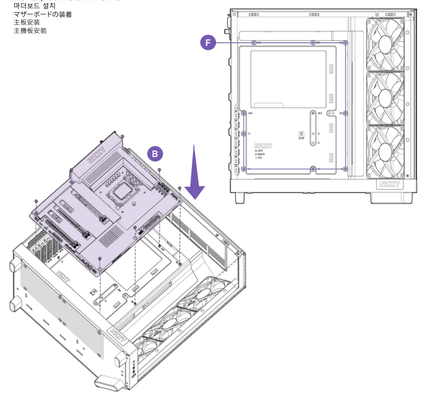

HDD/SSD DRIVE INSTALLATION

INSTALACIÓN DE LA HDD/SSD
INSTALLATION DE LA HDD/SSD
INSTALLATION DER HDD/SSD
INSTALLAZIONE DELLA HDD/SSD
INSTALAÇÃO DA HDD/SSD
HDD/SSD설치
HDD/SSDの装着
HDD/SSD安装
HDD/SSD安裝

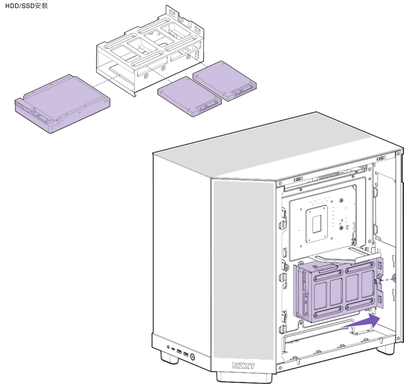

EXPANSION CARD INSTALLATION

INSTALACIÓN DE LA TARJETA DE EXPANSIÓN
INSTALLATION DE LA CARTE D'EXTENSION
INSTALLATION DER ERWEITERUNGSKARTE
INSTALLAZIONE DELLA SCHEDA D'ESPANSIONE
INSTALAÇÃO DA PLACA DE EXPANSÃO
확장 카드 설치
拡張カードの装着
扩展卡安装
擴充卡安裝

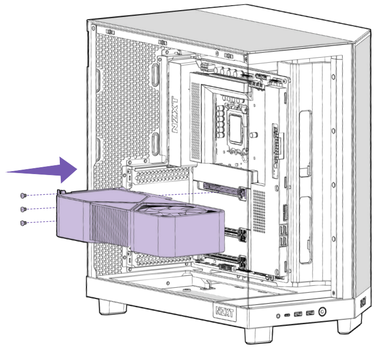

POWER SUPPLY INSTALLATION

INSTALACIÓN DE LA FUENTE DE ALIMENTACIÓN
INSTALLATION DE L'ALIMENTATION
INSTALLATION DER STROMVERSORGUNG
INSTALLAZIONE DELL'ALIMENTATORE
INSTALAÇÃO DA FONTE DE ALIMENTAÇÃO
전원공급장치 설치
電源の装着
电源安装
電源安裝

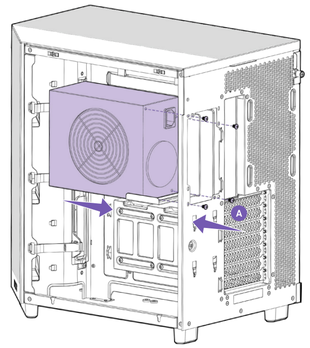

FAN AND RADIATOR SUPPORT

COMPATIBILIDAD DE VENTILADORES Y RADIADORES
PRISE EN CHARGE DES RADIATEURS ET VENTILATEURS
LÜFTER- UND KÜHLER-UNTERSTÜTZUNG
SUPPORTO VENTOLE E RADIATORE
SUPORTE PARA VENTOINHA E A RADIADOR
팬 및 라디에이터 지원
対応ファンおよびラジエータ
风扇和散热器支持
風扇和散熱排支援

FAN

TOP: 3x 120mm / 2 x 140mm
FRONT-SIDE: 3 x 120mm
REAR: 1 x 120mm
BOTTOM: 2 x 140mm

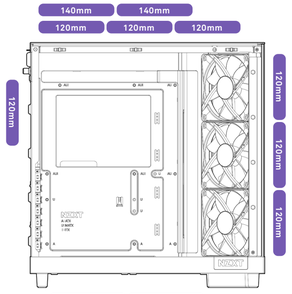

RADIATOR

TOP: Up to 360mm
REAR: Up to 120mm

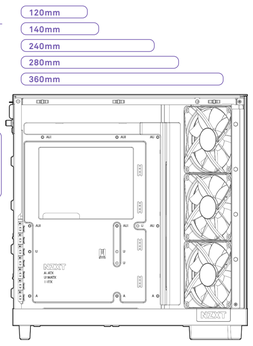

FAN & RADIATOR INSTALLATION

INSTALACIÓN DE VENTILADORES Y RADIADORES
INSTALLATION DES RADIATEURS ET VENTILATEURS
LÜFTER- UND KÜHLER-INSTALLATION
INSTALLAZIONE VENTOLE E RADIATORE
INSTALAÇÃO PARA VENTOINHA E A RADIADOR
팬 및 라디에이터 설치
ファンとラジエータの取り付け
风扇和散热器安装
風扇和散熱排安裝

RADIATOR

TOP: Up to 360mm
REAR: Up to 120mm

The screws shown will be provided within liquid cooler packaging.

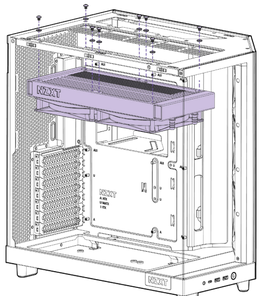

FAN

FRONT-SIDE: 3 x 120mm
TOP: 3x 120mm / 2 x 140mm

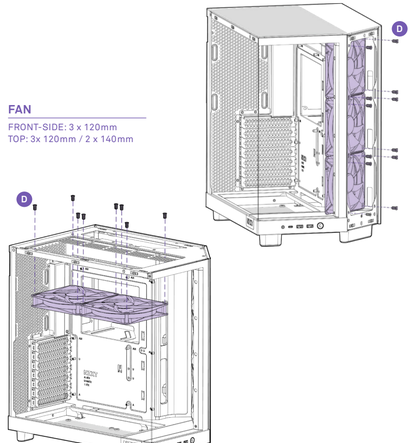

FAN

REAR: 1 x 120mm
BOTTOM: 2 x 140mm

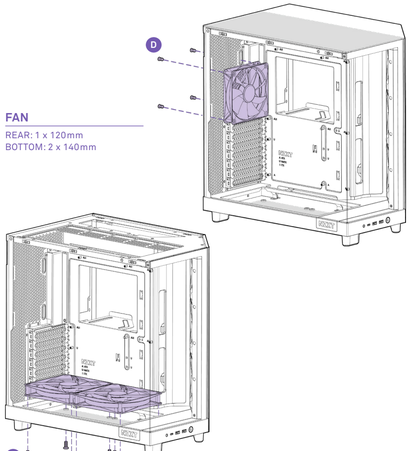

限用物质及元素列表 / 限用物質及元素清單

产品名称：机箱，型號（型式）：CA-2205, CA-2302

有害物质及其化学符号

單元	铅(Pb)	汞(Hg)	鎘(Cd)	六价铬(Cr+6)	多溴联苯(PBB)	多溴二苯醚(PBDE)
外壳	○	○	○	○	○	○
線材	○	○	○	○	○	○
玻璃	○	○	○	○	○	○
螺丝	○	○	○	○	○	○
塑胶零件	○	○	○	○	○	○

本表格依据SJ/T 11364的规定编制。
○：表示该有害物质在该部件所有均质材料中的含量均在GB/T 26572规定的限量要求下。
×：表示该有害物质至少在该部件的某一均质材料中的含量超出 GB/T 26572 規定的 限量要求,然该部件仍符合欧盟命令 2011/65/EU 的规范。

設備名稱：機箱，型號（型式）：CA-2205, CA-2302

限用物質及其化學符號

單元	鉛(Pb)	汞(Hg)	鎘(Cd)	六價鉻(Cr+6)	多溴聯苯(PBB)	多溴聯苯醚(PBDE)
外殼	○	○	○	○	○	○
線材	○	○	○	○	○	○
玻璃	○	○	○	○	○	○
螺絲	○	○	○	○	○	○
塑膠零件	○	○	○	○	○	○

備考1. "超出0.1wt%"及"超出0.01wt%"係指用用物質之百分比含量超出百分比含量基準值。
備考2. "○"係指該項用用物質之百分比含量未超出百分比含量基準值。
備考3. "—"係指該項用用物質為排除項目。

REGULATORY STATEMENT

PAPER MANUALE RACCOLTA CARTA PAP

Fr Cet appareil, ses accessoires et cordons se recyclent — À DÉPOSER EN MAGASIN ou À DÉPOSER EN DÉCHÈTERIE

Points de collecte sur www.quefairedemesdechets.fr

UKCA DECLARATION OF CONFORMITY
The object of the declaration described above is in conformity with the relevant UK harmonisation legislation:
- Electromagnetic Compatibility Regulations 2016
- The Restriction of the Use of Certain Hazardous Substances in Electrical and Electronic Equipment Regulations 2012

ROHS STATEMENT
This product is compliant to implemented RoHS (Restriction of Hazardous Substances) type regulations worldwide, including but not limited to China, India, Japan, Korea and European Union.

REACH STATEMENT
EU REACH SVHC Disclosure on Candidate List
REACH (Registration, Evaluation, Authorization and Restriction of Chemicals, EC 1907/2006) is the European Union's (EU) chemical substances regulatory framework. REACH requires NZXT Inc. to provide customers with sufficient information on Substances of Very High Concern (SVHC) contained in products in concentration above 0.1% weight by weight (w/w) to allow safe use of the product.

DECLARATION OF CONFORMITY
The device complies with the requirements set out in the Council Directives relevant Union harmonisation legislation:
- EMC Directive 2014/30/EU
- RoHS Directive 2011/65/EU & (EU) 2015/863

DÉCLARATION DE CONFORMITÉ Français
L'appareil est conforme aux exigences définies dans les directives du Conseil relatives à la législation d'harmonisation de l'Union :
- Directive EMC 2014/30/UE
- Directive RoHS 2011/65/UE et (UE) 2015/863

DECLARACIÓN DE CONFORMIDAD Español
El dispositivo cumple los requisitos impuestos en las directivas del Consejo relativas a la legislación de armonización de la Unión Europea :
- Directiva sobre compatibilidad electromagnética 2014/30/UE
- Directiva sobre sustancias peligrosas 2011/65/UE y (UE) 2015/863

DICHIARAZIONE DI CONFORMITÀ Italiano
Il dispositivo è conforme con i requisiti definiti nelle Direttive del Consiglio relative alla Norma sull'armonizzazione dell'Unione :
- Direttiva EMC 2014/30/UE
- Direttiva RoHS 2011/65/UE e (UE) 2015/863

KONFORMITÄTSERKLÄRUNG Deutsch
Das Gerät entspricht den Anforderungen der entsprechenden EU-Harmonisierungsrichtlinien des Rates:
- EMV-Richtlinie 2014/30/EU
- RoHS-Richtlinie 2011/65/EU & (EU) 2015/863

OŚWIADCZENIE ZGODNOŚCI Polski
Urządzenie jest zgodne z wymaganiami określonymi w odpowiednich unijnych Dyrektywach harmonizacyjnych Rady:
- Dyrektywa EMC 2014/30/UE
- Dyrektywa RoHS 2011/65/UE i (UE) 2015/863

KONFORMITETSDEKLARATION Svenska
Enheten uppfyller kraven som anges i Rådets direktivs relevanta harmoniseringslagstiftning för Europeiska unionen:
- EMC-direktivet 2014/30/EU
- RoHS-direktiv 2011/65/EU & (EU) 2015/863

VERKLARING VAN OVEREENSTEMMING Nederlands
Het apparaat voldoet aan de vereisten van de relevante richtlijnen van de Raad met betrekking tot harmonisatiewetgeving in de Unie:
- EMC-richtlijn 2014/30/EU
- RoHS-richtlijn 2011/65/EU & (EU) 2015/863

To protect the global environment and as an environmentalist, NZXT must remind you that:
Under the European Union ("EU") Directive on Waste Electrical and Electronic Equipment,
Directive 2002/96/EC, which takes effect on August 13, 2005, products of "electrical and electronic equipment" cannot be discarded as municipal waste anymore and manufacturers of covered electronic equipment will be obligated to take back such products at the end of their useful life. NZXT will comply with the product take back requirements at the end of life of NZXT-branded products that are sold into the EU. You can return these products to local collection points.

En tant qu'écologiste et afin de protéger l'environnement, NZXT tient à rappeler ceci:
Au sujet de la directive européenne (EU) relative aux déchets des équipement électriques et électroniques, directive 2002/96/EC, prenant effet le 13 août 2005, que les produits électriques et électroniques ne peuvent être déposés dans les décharges ou tout simple-ment mis à la poubelle. Les fabricants de ces équipements seront obligés de récupérer certains produits en fin de vie. NZXT prendra en compte cette exigence relative au retour des produits en fin de vie au sein de la communauté européenne. Par conséquent vous
pouvez retourner localement ces matériels dans les points de collecte.

FCC, ISED Statement
This device complies with Part 15 of the FCC Rules. Operation is subject to the following two conditions:
(1) This device may not cause harmful interference, and (2) this device must accept any interference received, including interference that may cause undesired operation.
CAN ICES-003(B) / NMB-003(B)

NZXT GLOBAL WARRANTY POLICY

This NZXT Global Warranty Policy governs the sale of products by NZXT to you.

I. WARRANTY LENGTH

New NZXT Product	Warranty Length for Parts
Computer Cases	2 Years

Any replacement product will be covered under warranty for the remainder of the warranty period or thirty days, whichever is longer. Proof of purchase is required for warranty service.

II. WHO IS PROTECTED
The Warranty covers only NZXT products purchased by the original consumer.

III. WHAT IS AND IS NOT COVERED
Please note that our warranty is not an unconditional guarantee. If the product, in NZXT's reasonable opinion, malfunctions within the warranty period, NZXT will provide you at its sole discretion with a repaired or replacement product, either new or refurbished, with a similar function that is equal or greater in value depending on supply. Our warranty does not cover the following:
- any product or serial number/warranty sticker modification applied without permission from NZXT;
- any damage that is not a manufacturing defect;
- damage, deterioration or malfunction resulting from: accident, abuse, misuse, neglect, fire, water, lightning, or other acts of nature, unauthorized product modification or failure to follow instructions included with the product;
- improper installation, unauthorized alterations or modifications, or repair or attempted repair by anyone not authorized by NZXT;
- shipping or transport damage (claims must be made with the carrier);
- normal wear and tear.

NZXT does not warrant that this product will meet your requirements. It is your responsibility to determine the suitability of this product for your purpose. For NZXT Store orders, we cover two way return shipping for all exchanges and returns. For all other authorized dealers, NZXT Support does not cover return shipping and only covers one way shipping from NZXT back to the end user for exchanges. Two way expedited shipping is provided for all PSUs covered under the Less Than Three program, indiscriminate of purchase location, provided the location is an approved NZXT reseller.

IV. EXCLUSION OF DAMAGES (DISCLAIMER)
NZXT's sole obligation and liability under this warranty is limited to the repair or replacement of a defective product with either a new or refurbished product with a similar function that is equal or greater in value at our option. NZXT shall not, in any event, be liable for any incidental or consequential damage, including but not limited to damages resulting from interruption of service and loss of data, business, or for liability in tort relating to this product or resulting from its use or possession.

V. LIMITATIONS OF IMPLIED WARRANTIES
There are no other warranties, expressed or implied, including but not limited to those of merchantability or fitness for a particular purpose. The duration of implied warranties is limited to the warranty length specified in Paragraph I.

VI. TO OBTAIN TECHNICAL SUPPORT
If you have already referenced your product owner's manual and still need help, you may contact us by phone at +1 (800) 228-9395, by email at service@nzxt.com, or visit the NZXT Support site at nzxt.com/customer-support.

VII. HOW TO OBTAIN A WARRANTY SERVICE FROM NZXT
To receive a warranty service for your product when purchased directly from NZXT, you must submit a request via the NZXT Support site outlining the problem. If a technician deems the product defective or requiring testing, you will be required to provide a copy of your proof of purchase, which will enable you to submit a Return Merchandise Authorization ("RMA") request.

Once approved, you'll receive an RMA number, upon which you will be asked to ship the defective item back to NZXT with the RMA number clearly marked or labelled on the package. NZXT recommends that appropriate measures are taken to safeguard the product from damage during shipping.

VIII. APPLICABLE LAW AND ADDITIONAL LEGAL RIGHTS FOR CONSUMERS
This warranty gives you specific legal rights. These conditions are governed and construed in accordance with the laws of California (with exception of its conflict of law provisions), and the application of the United Nations Convention of Contracts for the International Sale of Goods is expressly excluded. The non-exclusive jurisdiction of the courts of California is agreed, which means that you may bring a claim to enforce your consumer protection rights in connection with this Global Warranty in the country which you have your habitual residence where you may have additional rights. These rights may vary.

For original consumers who are covered by consumer protection laws or regulations in their country, state, or province of purchase or, if different, their country, state, or province of residence, the benefits conferred by this warranty are in addition to all rights and remedies conveyed by such consumer protection laws and regulations. To the extent that liability under such consumer laws can be limited, NZXT's liability is limited, and its sole option, to repair or replacement, either new or refurbished, with a similar function that is equal or greater in value depending on supply.

In the United Kingdom:
- For NZXT products sold to customers in the UK, during the expected lifespan of your product your legal rights entitle you to the following:
  - Up to 30 days: if your goods are faulty, then you can get an immediate refund.
  - Up to six months: if your goods can't be repaired or replaced, then you're entitled to a full refund, in most cases.
  - Up to six years: if your goods do not last a reasonable length of time you may be entitled to some money back.
- If the person seeking to rely on the guarantee is not the original consumer, the NZXT Warranty will cover the product in relation to that person provided that they are able to provide proof of the transfer of the benefit of the guarantee from the original consumer.
- The implied warranties under the Consumer Rights Act 2015 says that your goods must be as described, fit for all purposes for which such goods are usually supplied, and of satisfactory quality.

In the EU:
- If you are a consumer and have your habitual residence in the EU, you additionally enjoy the protection afforded to you by provisions that cannot be derogated from by agreement by virtue of the law where you have your habitual residence.

IX. WARRANTY SERVICE FROM RESELLERS
In the event that a warranty service is sought, you must provide proof of purchase (store receipt or invoice) in order to receive the service and if deemed necessary, repair or replacement product.

In North America:
Within the first 60 days after purchase, please return your product (or for power supplies installed within our enclosures, just the failed power supply) to your dealer or reseller for a replacement. If the product is still within warranty and you can no longer return it to your dealer, please contact NZXT Customer Support (see above) for assistance and instructions. NZXT will not accept returns without prior approval and an RMA number.

In Europe:
Within the first year after purchase, please return your product (or for power supplies installed within our enclosures, just the failed power supply) to your dealer or reseller for a replacement. If the product is still within warranty and you can no longer return it to your dealer, please contact NZXT Customer Support (see above) for assistance and instructions. NZXT will not accept returns without prior approval.

In Australasia:
Within the first two years after purchase, please return your product (or for power supplies installed within our enclosures, just the failed power supply) to your dealer or reseller for a replacement. If the product is still within warranty and you can no longer return it to your dealer, please contact NZXT Customer Support (see above) for assistance and instructions. NZXT will not accept returns without prior approval.

The cost of shipping will be borne at the first instance by you; however, if the purchased item is defective, NZXT will reimburse reasonable postage or transportation of costs.

Outside North America, Europe, and Australasia:
If your product needs to be returned within the warranty period, please contact the retailer or distributor from whom you purchased the product.

X. NZXT.COM STORE RETURNS/EXCHANGE POLICY
Eligible products under this NZXT Warranty qualify for a full refund or exchange only with an authorized RMA number and if the item is returned to the NZXT.com store inventory within 30 days of purchase. Returns are accepted and processed beyond 30 days of the purchase date. The NZXT.com Store reserves the right to deny any return or exchange. Refunds will be credited to the original method of payment. To initiate a return, simply submit a request via NZXT support site.

SUPPORT AND SERVICE

SUPPORT AND SERVICE
If you have any questions or problems with the NZXT product you purchased, please don't hesitate to contact us using our support system. support.nzxt.com

Please include a detailed explanation of your problem and your proof of purchase. For comments and suggestions, you can e-mail our design team, designer@nzxt.com. Lastly we would like to thank you for your support by purchasing this product.

For more information about NZXT, please visit us online. NZXT Website: nzxt.com

SOPORTE Y SERVICIO
Si tiene preguntas o problemas con el producto NZXT que usted compró, no dure en ponerse en contacto con service@nzxt.com y suministrar una explicación detallada de su problema así como su prueba de compra. Puede hacer consultas sobre piezas de repuesto en support.nzxt.com. Para comentarios y sugerencias, escriba un mensaje de correo electrónico a nuestro equipo de diseño: designer@nzxt.com. Gracias por comprar un producto NZXT. Para más información acerca de NZXT, visítenos en línea. Página web de NZXT: nzxt.com

SUPPORT ET SERVICE
Si vous avez des questions ou des problèmes avec le produit NZXT que vous avez acheté, n'hésitez pas à contacter service@nzxt.com avec une description détaillée de votre problème et votre preuve d'achat. Vous pouvez aussi commander des pièces de remplacement auprès support.nzxt.com. Pour les commentaires et les suggestions, envoyez un email à notre équipe de design, designer@nzxt.com. Merci d'avoir acheté ce produit de NZXT. Pour plus d'informations sur NZXT, visitez notre site Web. Site Web de NZXT : nzxt.com

KUNDENDIENST UND SERVICE
Falls Fragen oder Probleme bezüglich Ihres NZXT-Produktes auftreten, wenden Sie sich bitte mit einer detaillierten Problembeschreibung und Ihrem Kaufbeleg an service@nzxt.com. Ersatzteile können Sie unter support.nzxt.com anfragen. Kommentare und Anregungen senden Sie bitte per designer@nzxt.com an unser Designteam. Vielen Dank, dass Sie ein NZXT-Produkt erworben haben. Weitere Informationen über NZXT erhalten Sie im Internet. NZXT-Webseite: nzxt.com

ASSISTENZA E SERVIZIO
In caso di dubbi o problemi con il prodotto NZXT acquistato, non esitate a contattarci utilizzando il nostro sistema di assistenza. support.nzxt.com
Includere una spiegazione dettagliata del problema e la prova di acquisto. Per commenti e suggerimenti, siete pregati di inviare un messaggio al nostro team di progettisti, all'indirizzo: designer@nzxt.com. Infine, vogliamo ringraziarvi del vostro supporto con l'acquisto di questo prodotto. Per altre informazioni su NZXT, visitate il nostro sito. Sito NZXT: nzxt.com

ASSISTÊNCIA E MANUTENÇÃO
Caso tenha questões ou problemas com o produto NZXT adquirido, não hesite em contactar-nos através do endereço service@nzxt.com Forneceda a explicação detalhada do seu problema e a prova de compra. Poderá solicitar peças de substituição através do endereço support.nzxt.com. Para comentários e sugestões, contacte a nossa equipa de design através do endereço de e-mail, designer@nzxt.com. Obrigado por ter adquirido um produto NZXT. Para mais informações acerca da NZXT, visite-nos online. Web site da NZXT: nzxt.com

지원 및 서비스
구입한 NZXT 제품과 관련하여 질문 또는 문제가 있을 경우, 당사의 지원 시스템(support.nzxt.com)을 사용하여 문의하십시오.
문제를 자세히 기술하고 구매 증빙을 제출하십시오. 의견 또는 제안 사항이 있을 경우 당사 설계 팀에 designer@nzxt.com으로 이메일을 보내십시오. 마지막으로 이 제품을 구입하여 당사를 응원해 주셔서 감사합니다. NZXT에 대해 자세히 알려면 온라인으로 방문하십시오. NZXT 웹사이트: nzxt.com

サポートおよびサービス
購入されました NZXT の製品に関するご質問または問題は、問題の詳細および購入の証明を添えて、ご遠慮なく service@nzxt.com までご連絡ください。 交換部品は support.nzxt.com までお問合せください。ご意見およびご提案は弊社設計チーム、designer@nzxt.com までメールを送信してください。NZXT製品をご購入いただきましてありがとうございます。NZXTに関する詳細は、インターネット上のウェブサイトをご覧ください。NZXT ウェブサイト: nzxt.com

支持和服务
如果有任何疑问或者在使用 NZXT 产品的过程中遇到任何问题,欢迎联系 service@nzxt.com,联络时请提供关于问题的详细说明及购买凭证。您可以向 support.nzxt.com 寄送更换部件。如有任何意见或建议,欢迎联系我们的设计团队,电子邮件地址是 designer@nzxt.com。感谢您购买 NZXT 产品。有关 NZXT 的更多信息,请访问我们的在线网站。NZXT 网站:nzxt.com

支援和服務
如果在使用NZXT 產品的過程中有搞到任何問題疑問,歡迎聯繫 service@nzxt.com。並請提供問題的詳細說明及購買證明。您可以透過 support.nzxt.com 查詢更換部件。如有任何意見或建議,歡迎來信與設計團隊聯繫 designer@nzxt.com。最後,感謝您購買 NZXT 產品。有關 NZXT 的更多信息,請訪問我們的網站。NZXT 網站:nzxt.com

- Visit nzxt.com/warranty and support.nzxt.com for information on warranty coverage and service.
- Visite el sitio Web nzxt.com/warranty y support.nzxt.com para obtener información sobre la cobertura y el servicio de la garantía.
- Visitez nzxt.com/warranty et support.nzxt.com pour les informations de la couverture de la garantie et de service.
- Informationen zu Geltungsbereich und Service der Garantie finden Sie unter support.nzxt.com und nzxt.com/warranty.
- Visitare il sito nzxt.com/warranty e support.nzxt.com per informazioni sulla copertura e sul servizio della garanzia.
- Visite nzxt.com/warranty e support.nzxt.com para obter informações sobre a cobertura da garantia e assistência.
- 제품 보증 범위와 서비스 정보를 확인하시려면 nzxt.com/warranty 또는 support.nzxt.com 을 방문해 주시기 바랍니다.
- 保証範囲およびサービスに関するご情報については、support.nzxt.com と nzxt.com/warranty にアクセスしてください。
- 请访问 nzxt.com/warranty 和 support.nzxt.com 了解保修范围和服务的信息。
- 請訪問 nzxt.com/warranty 和 support.nzxt.com 了解產品保固範圍和更多服務訊息。

Scan the QR code to view or download the full manual.

NZXT, Inc. | 15736 E. Valley Blvd, City of Industry, CA 91744, USA
NZXT Europe GmbH | Ammerthalstrasse 32 Kirchheim bei Muenchen 85551, Germany
NZXT UK Ltd. | First Floor 5 Fleet Place London EC4M 7RD, GB United Kingdom
+1 (800) 228-9395 / service@nzxt.com / nzxt.com

V1

Ovaj dokument je originalno proizveden i objavljen od strane proizvođača, brenda NZXT, i preuzet je sa njihove zvanične stranice. S obzirom na ovu činjenicu, Tehnoteka ističe da ne preuzima odgovornost za tačnost, celovitost ili pouzdanost informacija, podataka, mišljenja, saveta ili izjava sadržanih u ovom dokumentu.

Napominjemo da Tehnoteka nema ovlašćenje da izvrši bilo kakve izmene ili dopune na ovom dokumentu, stoga nismo odgovorni za eventualne greške, propuste ili netačnosti koje se mogu naći unutar njega. Tehnoteka ne odgovara za štetu nanesenu korisnicima pri upotrebi netačnih podataka. Ukoliko imate dodatna pitanja o proizvodu, ljubazno vas molimo da kontaktirate direktno proizvođača kako biste dobili sve detaljne informacije.

Za najnovije informacije o ceni, dostupnim akcijama i tehničkim karakteristikama proizvoda koji se pominje u ovom dokumentu, molimo posetite našu stranicu klikom na sledeći link:

https://tehnoteka.rs/p/nzxt-kuciste-h6-flow-cc-h61fb-r1-crno-akcija-cena/