tehnoteka

https://tehnoteka.rs

Uputstvo za upotrebu (EN)

NZXT kućište H510 Elite CA-H510E-B1

NZXT

Tehnoteka je online destinacija za upoređivanje cena i karakteristika bele tehnike, potrošačke elektronike i IT uređaja kod trgovinskih lanaca i internet prodavnica u Srbiji. Naša stranica vam omogućava da istražite najnovije informacije, detaljne karakteristike i konkurentne cene proizvoda.

Posetite nas i uživajte u ekskluzivnom iskustvu pametne kupovine klikom na link:

https://tehnoteka.rs/p/nzxt-kuciste-h510-elite-ca-h510e-b1-akcija-cena/

H510 ELITE

PREMIUM COMPACT MID-TOWER ATX CASE

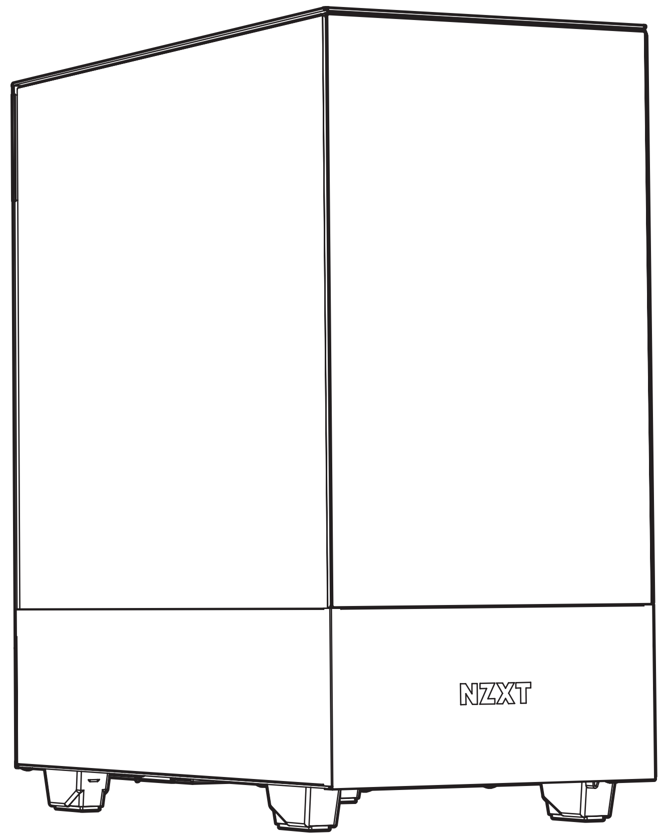

POWERED BY
NZXT CAM

EXPLODED VIEW

VISTA EXPLOSIONADA
VUE EN ÉCLATÉ
EXPLOSIONSDARSTELLUNG
VEDUTA IN ESPLOSO
VISTA EXPLODIDA
ТРЕХМЕРНОЕ ПРЕДСТАВЛЕНИЕ ДЕТАЛЕЙ
확대도
展開図
部件分解图
部件分解圖

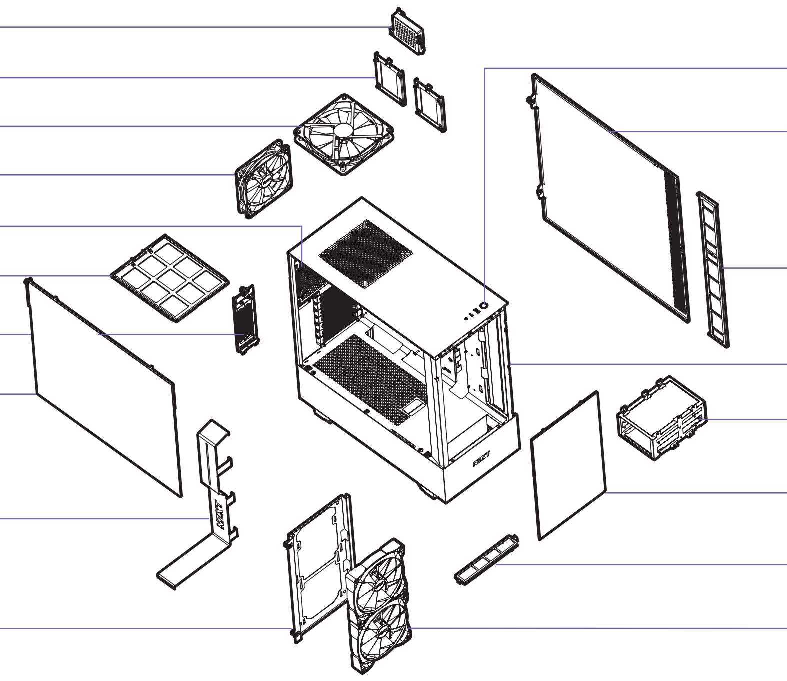

1. Dispositivo inteligente V2
2. Bandeja unidad de estado sólido
3. Ventilador de escape superior
4. Ventilador de escape trasero
5. Tira LED RGB superior
6. Filtro de polvo de la PSU
7. Soporte vertical para GPU
8. Panel de vidrio templado lateral izquierdo
9. Barra de limpieza
10. Soporte del refrigerador frontal
11. E/S frontal
12. Panel metálico derecho
13. Filtro antipolvo delantero derecho
14. Chasis
15. Compartimento do disco rígido
16. Panel frontal de vidrio templado
17. Filtro antipolvo delantero (bajo)
18. Ventilador Aer RGB 2 140mm

1. Smart Device V2
2. Plateau SSD
3. Ventilateur en extraction du haut
4. Ventilateur d'échappement arrière
5. Bande LED RVB du dessus
6. Filtre à poussière du bloc d'alimentation
7. Support vertical GPU
8. Panneau latéral gauche en verre trempé
9. Barre pour la gestion des câbles
10. Support du dissipateur avant
11. E/S avant
12. Panneau métallique droit
13. Filtre à poussière avant droit
14. Châssis
15. Plateau pour disque dur
16. Panneau avant en verre trempé
17. Filtre à poussière avant (dessous)
18. Ventilateur Aer RGB 2 140mm

1. Smart Device V2
2. SSD-Fach
3. Lüfter für Luftauslass an Oberseite
4. Lüfter für Luftauslass an Rückseite
5. RGB-LED-Streifen an Oberseite
6. Netzteil-Staubfilter
7. Vertikale GPU-Halterung
8. Hartglasfenster links
9. Reinigungsleiste
10. Kühlerhalterung an Vorderseite
11. E/A an der Vorderseite
12. Seitliche Abdeckung rechts aus Metall
13. Staubfilter vorne rechts
14. Gehäuse
15. Festplatteneinsatz
16. Frontplatte aus gehärtetem Glas
17. Staubfilter Unterseite vorne
18. Aer RGB 2 140mm Lüfter

1. Dispositivo intelligente V2
2. Cassetto SDD
3. Ventola di scarico superiore
4. Ventola di scarico posteriore
5. Striscia LED RGB superiore
6. Filtro polvere alimentatore
7. Supporto Verticale per GPU
8. Pannello laterale sinistro in vetro temperato
9. Barra di gestione dei cavi
10. Staffa raffreddamento anteriore
11. I/O anteriore
12. Pannello destro in metallo
13. Filtro antipolvere frontale destro
14. Chassis
15. Cassetto HDD
16. Vetro frontale temperato
17. Filtro antipolvere frontale inferiore
18. Aer RGB 2 140mm Ventola

1. Dispositivo inteligente V2
2. Tabuleiro de SSD
3. Ventoinha de exaustão da parte superior
4. Ventoinha de exaustão traseira
5. Tira de LED RGB da parte superior
6. Filtro de pó do PSU
7. Montagem Vertical GPU
8. Vidro temperado do painel lateral esquerdo
9. Barra de limpeza
10. Suporte da ventoinha frontal
11. E/S frontal
12. Painel de metal direito
13. Filtro de pó do lado direito da frente
14. Chassi
15. Bandeja de unidade de disco duro
16. Vidro temperado do painel frontal
17. Filtro de pó do fundo da frente
18. Ventilador Aer RGB 2 140mm

1. Интеллектуальное устройство V2
2. Лоток для твердотельных накопителей
3. Верхний вытяжной вентилятор
4. Задний вытяжной вентилятор
5. Верхняя светодиодная лента RGB
6. Пылевой фильтр блока питания
7. Вертикальное крепление графического процессора
8. Левая боковая панель из закаленного стекла
9. Панель Clean sweep
10. Кронштейн передней системы охлаждения
11. Разъемы спереди
12. Правая металлическая панель
13. Передний правый воздушный фильтр
14. Корпус
15. Лоток для жесткого диска
16. Передняя панель из закаленного стекла
17. Передний нижний воздушный фильтр
18. Вентилятор Aer RGB 2 140 mm

1. 스마트 장치 V2
2. SSD 트레이
3. 상단 배기팬
4. 후면 배기팬
5. 상단 RGB LED 스트립
6. PSU 먼지 필터
7. 그래픽카드 세로 장착
8. 좌측 강화 유리 사이드 패널
9. 케이블 정리 바
10. 전면 쿨러 브래킷
11. 전면 I/O
12. 우측 메탈 패널
13. 전면 우측 먼지 필터
14. 섀시
15. HDD 트레이
16. 전면 패널 강화 유리
17. 전면 하단 먼지 필터
18. Aer RGB 2 140mm 팬

1. スマートデバイスV2
2. SSDトレイ
3. トップ排出ファン
4. リア排出ファン
5. トップ RGB LED ストリップ
6. PSU ダストフィルター
7. 直立ディスプレイカードの取り付け
8. 左サイド強化ガラスパネル
9. クリーン保持具
10. フロントクーラーブラケット
11. フロント I/O
12. 右サイド金属パネル
13. フロントライトダストフィルター
14. シャーシ
15. ハードドライブトレイ
16. フロントパネル強化ガラス
17. フロントボトムダストフィルター
18. AER RGB 2 140mmファン

1. 智能设备 V2
2. SSD架
3. 顶部排气扇
4. 后排气扇
5. 顶部 RGB LED 灯带
6. PSU 防尘过滤器
7. 直立显示卡安装
8. 左侧钢化玻璃板
9. 理线档板
10. 前端冷却器支架
11. 前端 I/O
12. 右侧金属板
13. 前板右侧防尘网
14. 机箱
15. 硬盘架
16. 前面板钢化玻璃
17. 前板底部防尘网
18. AER RGB 2 140mm风扇

1. 智慧裝置 V2
2. SSD架
3. 頂部排風風扇
4. 後方排風風扇
5. 頂部 RGB LED 燈條
6. 電源供應器防塵濾網
7. 直立顯卡固定結構
8. 左側強化玻璃面板
9. 理線檔板
10. 前方散熱器架
11. 前方 I/O
12. 右側金屬面板
13. 前右側濾網
14. 機殼
15. 硬盤架
16. 前面板鋼化玻璃
17. 前底部濾網
18. AER RGB 2 140mm風扇

CLEARANCES AND SPECIFICATIONS

MEDIDAS Y ESPECIFICACIONES
DÉGAGEMENTS ET SPÉCIFICATIONS
ABSTÄNDE UND TECHNISCHE DATEN
SPAZI NECESSARI E SPECIFICHE
DIMENSÕES E ESPECIFICAÇÕES
ТЕХНИЧЕСКИЕ ХАРАКТЕРИСТИКИ И ЗАЗОРЫ
간격과 규격
空間と仕様
间距与规格
間距與規格

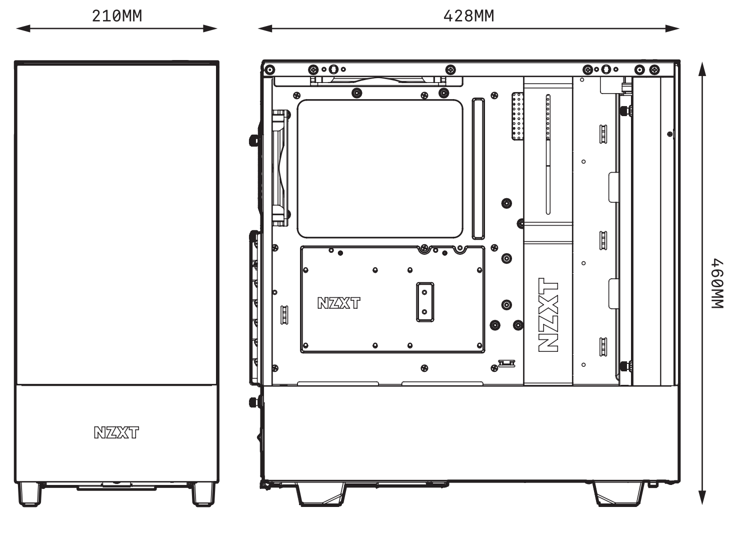

Motherboard Support	ATX, Micro-ATX, Mini-ITX
2.5" SSD Support	2+1
3.5" HDD Support	2+1
Expansion Slots	7
GPU Clearance	368.5mm
Cable Management	19-23mm
CPU Cooler Clearance	165mm
Front Radiator	60mm

Placas base admitidas	ATX, Micro-ATX, Mini-ITX
Unidad de estado sólido de 2,5"	2+1
Unidad de disco duro de 3,5"	2+1
Ranuras de expansión	7
Distancia de seguridad para GPU	368.5mm
Administración de los cables	19-23mm
Disipador de la CPU	165mm
Radiador frontal	60mm

Cartes mère prises en charge	ATX, Micro-ATX, Mini-ITX
SSD 2,5"	2+1
Disques durs 3,5"	2+1
Baies d'extension	7
Longueur du GPU	368.5mm
Gestion du câblage	19-23mm
Radiateur du processeur	165mm
Radiateur avant	60mm

Motherboard-Unterstützung	ATX, Micro-ATX, Mini-ITX
2,5-Zoll-SSD	2+1
3,5-Zoll-Festplatte	2+1
Erweiterungssteckplätze	7
GPU-Abstand	368.5mm
Kabelverwaltung	19-23mm
CPU-Kühler	165mm
Vorderer Kühlkörper	60mm

Scheda madre supportata	ATX, Micro-ATX, Mini-ITX
SDD 2.5"	2+1
HDD 3.5"	2+1
Alloggi d'espansione	7
Spazio necessario alla GPU	368.5mm
Gestione dei cavi	19-23mm
Dispersore di calore CPU	165mm
Radiatore frontale	60mm

Placa-principais suportadas	ATX, Micro-ATX, Mini-ITX
SSD de 2,5"	2+1
HDD de 3,5"	2+1
Ranhuras de expansão	7
Folga para a GPU	368.5mm
Gestão de cabos	19-23mm
Dissipador de CPU	165mm
Radiador frontal	60mm

Поддержка материнской платы	ATX, Micro-ATX, Mini-ITX
для твердотельных накопителей 2,5"	2+1
для жестких дисков 3,5"	2+1
Разъемы расширения	7
Зазор для графического процессора	368.5mm
Организация кабельных систем	19-23mm
Кулер процессора	165mm
Передний радиатор	60mm

마더보드 지원	ATX, Micro-ATX, Mini-ITX
2.5" SSD	2+1
3.5" HDD	2+1
확장 슬롯	7
GPU 간격	368.5mm
케이블 정리	19-23mm
CPU 쿨러	165mm
앞쪽 라디에이터	60mm

マザーボードサポート	ATX, Micro-ATX, Mini-ITX
2.5"SSDサポート	2+1
3.5"HDDサポート	2+1
エクスパンションスロット	7
GPUクリアランス	368.5mm
ケーブルの管理	19-23mm
CPUクーラークリアランス	165mm
フロントラジエーター	60mm

主板支持	ATX, Micro-ATX, Mini-ITX
2.5"SSD支持	2+1
3.5"HDD支持	2+1
扩充槽	7
GPU 间距	368.5mm
线缆管理	19-23mm
CPU 散热器间距	165mm
前面散热器	60mm

主板支援	ATX, Micro-ATX, Mini-ITX
2.5"SSD支援	2+1
3.5"HDD支援	2+1
擴充槽	7
GPU 間距	368.5mm
線纜管理	19-23mm
CPU 散熱器間距	165mm
前面散熱器	60mm

ACCESSORY BOX

CAJA DE ACCESORIOS
BOITE D'ACCESSOIRES
ZUBEHÖRSET
SCATOLA DEGLI ACCESSORI
CAIXA DE ACESSÓRIOS
КОРОБКА С ПРИНАДЛЕЖНОСТЯМИ
악세사리 박스
部品箱（説明書入り）
配件盒
零件盒

A Hexagon Screw 6-32 x 6mm
x4

B Screw 6-32 x 5mm
x21

C Screw M3 x 5mm
x12

D Screw KB5 x 10mm
x8

E Standoff 6-32 x 6.5+4mm
x1

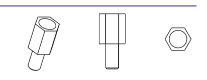

F Standoff Wrench
x1

G Cable Tie
x10

H Breakout Cable
x1

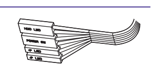

I 3.5mm Headset audio jack splitter
x1

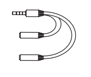

A. Hexagon screw 6-32 x 6mm	Power supply installation
B. Screw 6-32 x 5mm	Motherboard installation, 3.5 hard drive installation
C. Screw M3 x 5mm	2.5 hard drive installation
D. Screw KB5 x 10mm	Fan installation
E. Standoff 6-32 x 6.5+4mm	Motherboard installation
F. Standoff wrench	Motherboard installation
G. Cable tie	Cable managment
H. Breakout Cable	For Non-Intel Standard F_Panel Header Use
I. 3.5mm Headset Audio Jack splitter	Convert single 3.5mm 4 poles audio port to two 3.5mm 3 poles audio ports

A. Tornillo hexagonal de 6-32 x 6 mm	Instalación de la fuente de alimentación
B. Tornillo de 6-32 x 5 mm	Instalación de la placa base e instalación de la unidad de disco duro de 3,5"
C. Tornillo M3 x 5mm	Instalación de la unidad de disco duro de 2,5"
D. Tornillo KB5 x 10 mm	Instalación del ventilador
E. Separador 6-32 x 6,5 +4 mm	Instalación de la placa base
F. Llave para separadores	Instalación de la placa base
G. Brida para cables	Administración de los cables
H. Cable multiconector	Para panel frontal de placas base no Intel.
I. Divisor del conector de audio de los auriculares de 3.5mm	Convierta un solo puerto de audio de 3.5 mm y 4 polos en dos puertos de audio de 3.5 mm y 3 polos

A. Vis hexagonale 6-32 x 6 mm	Installation de l'alimentation électrique
B. Vis 6-32 x 5 mm	Installation de la carte mère, installation du disque dur 3,5"
C. Vis M3 x 5 mm	Installation du disque dur 2,5"
D. Vis KB5 x 10 mm	Installation du ventilateur
E. Entretoise 6-32 x 6,5 + 4 mm	Installation de la carte mère
F. Clé pour entretoise	Installation de la carte mère
G. Attache-câble	Gestion du câblage
H. Câble multi connexions	Pour le connecteur Front Panel de cartes mères non-intel
I. Répartiteur audio jack 3,5 mm pour casque	Convertissez un seul port audio 3,5 mm à 4 pôles en deux ports audio 3,5 mm à 3 pôles

A. Sechskantschraube 6 – 32 x 6 mm	Netzteilinstallation
B. Schraube 6 – 32 x 5 mm	Motherboard-Installation, 3,5-Zoll-Festplatteninstallation,
C. Schraube M3 x 5 mm	2,5-Zoll-Festplatteninstallation
D. Schraube KB5 x 10 mm	Lüfterinstallation
E. Abstandhalter 6 – 32 x 6,5 + 4 mm	Motherboard-Installation
F. Abstandhalter-Schlüssel	Motherboard-Installation
G. Kabelbinder	Kabelverwaltung
H. Kabelpeitsche	Front Panel Header für alle gängigen nicht-Intel Mainboards
I. 3,5 mm Kopfhörer-Audio-Splitter	Wandeln Sie einen einzelnen 3,5-mm-4-Pol-Audioport in zwei 3,5-mm-3-Pol-Audioports um

A. Vite esagonale 6-32 x 6 mm	Installazione dell'alimentatore
B. Vite 6-32 x 5 mm	Installazione della scheda madre, installazione HDD 3.5"
C. Vite M3 x 5 mm	Installazione HDD 2.5"
D. Vite KB5 x 10 mm	Installazione della ventola
E. Distanziatore 6-32 x 6,5 + 4 mm	Installazione della scheda madre
F. Chiave per distanziatori	Installazione della scheda madre
G. Fascetta per cavi	Gestione dei cavi
H. Cavo multiconnessione	Connettore F-Panel per Mainboard non Intel
I. Splitter per jack audio da 3,5 mm	Converti singola porta audio da 3,5 mm a 4 poli in due porte audio da 3,5 mm a 3 poli

A. Parafusos hexagonal 6-32 x 6 mm	Instalação da fonte de alimentação
B. Parafusos 6-32 x 5 mm	Instalação da placa principal, instalação da unidade de 3,5"
C. Parafusos M3 x 5 mm	Instalação da unidade de 2,5"
D. Parafusos KB5 x 10 mm	Instalação da ventoinha
E. Separadores 6-32 x 6,5+4 mm	Instalação da placa principal
F. Chave para separador	Instalação da placa principal
G. Braçadeira para cabos	Gestão de cabos
H. Cabo divisor	Para ligação do painel frontal (F-Panel) em placa-mãe padrão não-Intel
I. Divisor de jack de áudio de 3,5 mm	Converta uma única porta de áudio de 4 polos de 3,5 mm em duas portas de áudio de 3 polos de 3,5 mm

A. Винт шестигранный 6-32 x 6 мм	Установка источника питания
B. Винт 6-32 x 5 мм	Установка материнской платы, установка жесткого диска 3,5"
C. Винт M3 x 5 мм	Установка жесткого диска 2,5"
D. Винт KB5 x 10 мм	Установка вентилятора
E. Стойка 6-32 x 6,5 + 4 мм	Установка материнской платы
F. Гаечный ключ	Установка материнской платы
G. Кабельный хомут	Организация кабельных систем
H. Кабель-разветвитель	Для подключения фронтальной панели к материнским платам с разъёмами не-Intel стандарта
I. Разъем 3,5 мм для наушников	Преобразование одного 3,5-мм 4-полюсного аудиопорта в два 3,5-мм 3-полюсных аудиопорта

A. 육각나사 6-32 x 6mm	전원공급장치 설치
B. 나사 6-32 x 5mm	마더보드 설치, 3.5 하드 드라이브 설치
C. 나사 M3 x 5mm	2.5 하드 드라이브 설치
D. 나사 KB5 x 10mm	팬 설치
E. 스탠드오프 6-32 x 6.5+4mm	마더보드 설치
F. 스탠드오프 렌치	마더보드 설치
G. 케이블 타이	케이블 정리
H. 브레이크아웃 케이블	비 인텔 표준 메인보드 F-패널(전면 패널) 헤더 용
I. 3.5mm 헤드셋 오디오 잭 스플리터	단일 3.5mm 4 극 오디오 포트를 2 개의 3.5mm 3 극 오디오 포트로 변환

A. 6角ネジ6-32 x 6mm	電源装着用
B. ネジ6-32 x 5mm	マザーボード装着、3.5HDD装着用
C. ネジ M3 x 5mm	2.5HDD装着
D. ネジKB5 x 10mm	ファン装着用
E. スタンドオフ6-32 x 6.5+4mm	マザーボード装着用
F. スタンドオフ　レンチ	マザーボード装着用
G. ケーブルタイ	ケーブル整理用
H. ブレークアウトケーブル	MBのF-PanelヘッダがIntel標準ではない場合
I. 3.5mmヘッドセットオーディオジャックスプリッタ	単一の3.5mm 4極オーディオポートを2つの3.5mm 3極オーディオポートに変換

A. 六角螺丝 6-32 x 6mm	安装电源
B. 螺丝 6-32 x 5mm	主板安装, 3.5 硬盘安装
C. 螺丝 M3 x 5mm	2.5 硬盘安装
D. 螺丝 KB5 x 10mm	安装风扇
E. 脚柱 6-32 x 6.5+4mm	主板安装
F. 脚柱套筒板手	主板安装
G. 束线带	线缆管理
H. 分接线	用于非英特尔标准主板前版接口
I. 3.5mm耳机音频孔分配器	将单个3.5mm 4极音频端口转换为两个3.5mm 3极音频端口

A. 六角螺絲 6-32 x 6mm	安裝電源
B. 螺絲 6-32 x 5mm	主機板安裝, 3.5 硬碟安裝
C. 螺絲 M3 x 5mm	2.5 硬碟安裝
D. 螺絲 KB5 x 10mm	安裝風扇
E. 腳柱 6-32 x 6.5+4mm	主板安裝
F. 腳柱套筒板手	主板安裝
G. 束線帶	線纜管理
H. 分接線	用於非英特爾標準主板前版接頭
I. 3.5mm 耳機音源孔分接線	將單個3.5mm 4極音源孔轉換為兩個3.5mm 3極音源孔

SMART DEVICE V2

DISPOSITIVO INTELIGENTE V2
APPAREIL INTELLIGENT V2
SMART DEVICE V2
DISPOSITIVO INTELLIGENTE V2
DISPOSITIVO INTELIGENTE V2
ИНТЕЛЛЕКТУАЛЬНОЕ УСТРОЙСТВО V2
스마트 장치 V2
スマートデバイスV2
智能设备 V2
智慧裝置 V2

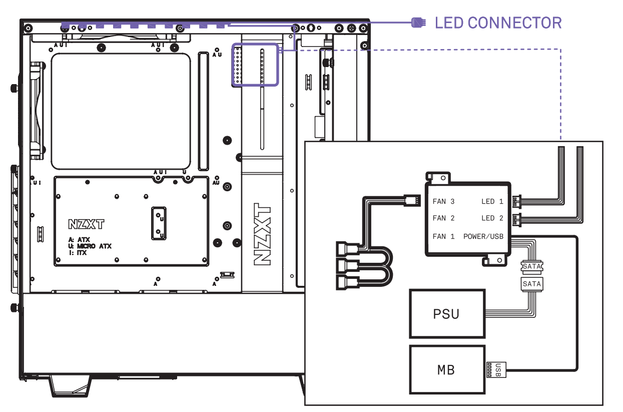

SMART DEVICE V2

The Smart Device connects to your PC via a single internal USB 2.0 connector. To enable control of the Smart Device, download and install NZXT CAM from camwebapp.com.

El dispositivo inteligente se conecta a tu PC mediante un único conector USB 2.0 interno. Para activar el control del dispositivo inteligente, descarga e instala NZXT CAM desde camwebapp.com.

Le Smart Device se connecte à votre PC via un seul port USB 2.0 interne. Pour activer le Smart Device, veuillez télécharger NZXT CAM sur camwebapp.com.

Das Smart Device wird über den internen USB 2.0-Anschluss mit Ihrem PC verbunden. Um die Steuerung des Smart Device zu aktivieren, einfach NZXT CAM über camwebapp.com herunterladen und installieren.

Il dispositivo intelligente si collega al PC tramite un connettore USB 2.0 singolo interno. Per abilitare il controllo del dispositivo, scaricare e installare NZXT CAM da camwebapp.com.

O dispositivo inteligente se conecta a seu computador por um conector USB 2.0 interno simples. Para habilitar o controle do dispositivo inteligente, baixe e instale o NZXT CAM em camwebapp.com.

Интеллектуальное устройство подключается к ПК через внутренний порт USB 2.0 Для управления интеллектуальным устройством загрузите и установите NZXT CAM с сайта camwebapp.com.

이 스마트 장치는 단일 내부 USB 2.0 커넥터를 통해 PC에 연결됩니다. 스마트 장치의 제어 기능을 사용하려면 camwebapp.com에서 NZXT CAM을 다운로드하고 설치하십시오.

スマートデバイスは、内蔵 USB 2.0 コネクタ 1 つで PC に接続します。スマートデバイスを制御するには、camwebapp.com から NZXT CAM をダウンロードしてインストールしてください。

智能设备通过单个 USB 2.0 接口连接到您的计算机。要想控制智能设备，请从 camwebapp.com 下载并安装 NZXT CAM。

智慧裝置透過一個內部的 USB 2.0 連接器連接至電腦。若要控制智慧裝置，請至 camwebapp.com 下載並安裝 NZXT CAM。

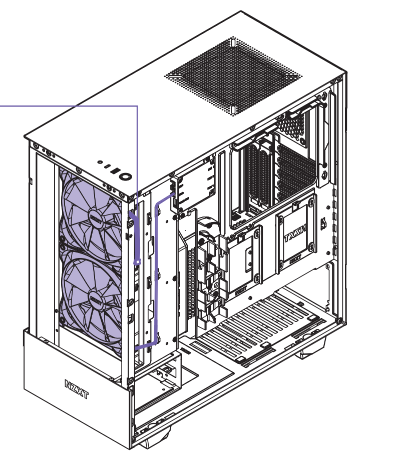

2x AER RGB 2 are integrated.
Connect additional AER RGB 2 fans via the end connector located at front top AER RGB 2 fans.

PORTS

FAN CONNECTORS – Three Fan connectors for three channels. To attach additional fans, use the included fan splitters.
Note: The first fan connector with 4 pins on the fan splitter will be the primary fan. Do not mix PWM or 3-pin fans.
RGB LED CONNECTOR – One LED strip is pre-installed inside the case. Connect additional HUE 2 LED Strips via the end connector located on the top LED strip. To Connect Aer RGB 2, connect directly to the second RGB channel.
POWER CONNECTOR – Connect to the power supply to power on the smart device, fans, and LED strips.
Note: Do not connect while PC is powered on.

CONECTORES DE VENTILADOR – Tres conectores de ventilador para tres canales. Para conectar ventiladores adicionales, utiliza los cables bifurcadores para ventilador incluidos.
Nota: El primer conector de ventilador con 4 patillas del cable bifurcador para ventilador será el ventilador principal. No mezcle ventiladores PWM y de 3 patillas.
CONECTOR LED RGB – una tira de LED está preinstalada dentro de la carcasa. Conecta tiras LED HUE 2 adicionales a través del conector final situado en la tira LED superior. Para conectar Aer RGB 2, puedes hacerlo directamente al segundo canal RGB.
CONECTOR DE ALIMENTACIÓN – Conéctalo a la fuente de alimentación para alimentar el dispositivo inteligente, los ventiladores y las tiras de LED.
Nota: No lo conectes mientras el PC esté encendido.

CONNECTEURS DE VENTILATEUR – Trois connecteurs de ventilateur pour trois canaux. Pour installer d'autres ventilateurs, utilisez les répartiteurs fournis.
Remarque : le ventilateur branché au premier connecteur de ventilateur à 4 broches du répartiteur de ventilateur est le ventilateur principal. Ne pas brancher les ventilateurs PWM et les modèles à 3 broches sur le même canal.
CONNECTEUR LED RGB – Une bande de LED est préinstallée dans le boîtier. Connectez des bandes LED HUE 2 additionnelles au connecteur au bout de la bande LED supérieure. Pour connecter des Aer RGB 2, connectez-les directement sur le second canal RGB.
CONNECTEUR D'ALIMENTATION – Branchez à l'alimentation pour alimenter le Smart Device, les ventilateurs et les bandes LED.
Remarque : ne pas brancher lorsque l'ordinateur est sous tension.

LÜFTERANSCHLÜSSE – Drei Lüfteranschlüsse für drei Kanäle. Weitere Lüfter können über die im Lieferumfang enthaltenen Lüfter-Splitter angeschlossen werden.
Hinweis: Der erste 4-polige Lüfteranschluss am Lüfter-Splitter ist der primäre Lüfter- PWM und 3-polige Lüfter dürfen nicht über denselben Kanal kombiniert werden.
RGB-LED-STECKVERBINDER – Ein LED-Streifen ist im Gehäuse vorinstalliert. Verbinden Sie zusätzliche HUE 2 LED-Streifen über den Verbindungsstecker, der sich auf dem oberen LED-Streifen befindet. Um Aer RGB 2 Lüfter zu verbinden, verwenden Sie bitte direkt den zweiten RGB-Kanal.
STROMANSCHLUSS – Schließen Sie das Netzteil an, um das Smart Device, die Lüfter und die LED-Streifen einzuschalten.
Hinweis: Nicht anschließen, während der PC eingeschaltet ist.

CONNETTORI VENTOLE – Tre connettori ventole per tre canali. Per fissare le ventole aggiuntive, utilizzare gli splitter ventole inclusi.
Nota: il primo connettore ventole con 4 pin sullo splitter ventola sarà la ventola principale. Non mischiare ventole PWM e ventole a 3 pin nello stesso canale.
CONNETTORE LED RGB – Una striscia LED è preinstallata all'interno della custodia. Verbinden Sie zusätzliche HUE 2 LED-Streifen über den Verbindungsstecker, der sich auf dem oberen LED-Streifen befindet. Um Aer RGB 2 Lüfter zu verbinden, verwenden Sie bitte direkt den zweiten RGB-Kanal.
CONNETTORE DI ALIMENTAZIONE – Collegare l'alimentazione per accendere il dispositivo intelligente, le ventole e i nastri LED.
Nota: non effettuare il collegamento se il PC è acceso.

CONECTORES DE VENTOINHA – Três conectores de ventoinhas para três canais. Para conectar ventoinha adicionais, utilize os divisores para ventoinha incluídos.
Nota: O primeiro conector de ventoinha com 4 pinos no divisor para ventoinha será a ventoinha primária. Não misture ventoinhas PWM ou 3 pinos.
CONECTOR RGB DE LED – Uma faixa de LED é pré-instalada dentro do gabinete. Conecte outras fitas LED HUE 2 através do conector localizado no final da fita LED do topo. Para conectar o Aer RGB 2, conecte-o diretamente ao segundo canal RGB.
CONECTOR DE ALIMENTAÇÃO – Conecte a fonte de alimentação à alimentação do dispositivo inteligente, às ventoinhas e às faixas de LED.
Nota: Não conecte enquanto o computador estiver ligado.

SMART DEVICE V2

DISPOSITIVO INTELIGENTE V2
APPAREIL INTELLIGENT V2
SMART DEVICE V2
DISPOSITIVO INTELLIGENTE V2
DISPOSITIVO INTELIGENTE V2
ИНТЕЛЛЕКТУАЛЬНОЕ УСТРОЙСТВО V2
스마트 장치 V2
スマートデバイスV2
智能设备 V2
智慧裝置 V2

Разъемы вентиляторов - Три разъема вентиляторов для трех каналов. Чтобы присоединить дополнительные вентиляторы, воспользуйтесь разветвительными кабелями для вентиляторов (в комплекте).
Примечание. Первый 4-контактный разъем разветвительного кабеля предназначен для основного вентилятора. Не используйте PWM и 3-контактные вентиляторы на одном канале.
Светодиодный разъем (RGB) - две дополнительные светодиодные полосы предварительно установлены внутри корпуса. Подключите дополнительные светодиодные полосы HUE 2 через концевой разъем, расположенный на верхней светодиодной полоске. Для подключения Aer RGB 2 подключите непосредственно ко второму каналу RGB.
Разъем питания - Чтобы включить интеллектуальное устройство, вентиляторы и светодиодные ленты, подключите их к блоку питания. Примечание. Не подключайте, если ПК включен.

팬 커넥터 - 3개 채널을 탑재했으며, 각 채널별로 3개의 팬 커넥터가 있습니다. 다른 팬을 추가로 설치하려면 포함된 팬 스플리터를 사용하십시오.
참고: 팬 스플리터에 핀 4개가 있는 첫 번째 팬 커넥터가 기본 팬입니다. PWM과 3핀 팬을 혼용하지 마십시오.
RGB LED 커넥터 - 하나의 LED 스트립이 케이스 내부에 사전 설치됨. 상단 LED 스트립의 끝단에 위치한 커넥터를 이용해 HUE 2 LED 스트립을 추가로 연결하십시오. Aer RGB 2 제품을 연결하려면 두 번째 RGB 채널에 직접 연결하십시오.
전원 커넥터 - 전원 공급 장치에 연결하여 스마트 장치, 팬, LED 스트립에 전원을 공급합니다.
참고: PC 전원이 켜져 있는 동안에는 연결하지 마십시오.

ファンコネクタ - 3 つのチャネル用に 3 つのファンコネクタがあります。追加のファンを取り付けるには、付属のファンスプリッタを使用してください。
注：ファンスプリッタの最初の4ピンファンコネクタがプライマリファンになります。同じチャネルにPWMファンと3ピンファンを混在させないでください。
RGB LED コネクタ - 1ハウジングにプレインストールされたLEDストリップ。追加のHUE 2 LEDストリップは、上部LEDストリップの端にあるコネクタを介して接続されます。Aer RGB 2 ファンを接続するには、2番目のRGBチャンネルに直接接続します。
電源コネクタ - スマートデバイス、ファン、LED ストリップに電源を供給するには、電源に接続してください。
注：PC の電源がオンの間は接続しないでください。

风扇接头 - 三个风扇接头，用于三个通道。要连接额外的风扇，请使用随附的风扇转接线。
注：风扇分频线上第一个 4 针风扇接头将用于主风扇。在同一通道请勿混淆 PWM 或 3 针风扇。
RGB LED 接头 - 一个LED灯带预装在机箱内。通过位于顶部LED灯带的末端连接器连接额外的HUE 2 LED灯带。要连接Aer RGB 2，请直接连接到第二个RGB通道。
电源接头 - 连接到电源，让智能设备、风扇和 LED 灯带通电。
注：请勿在计算机通电状态下进行连接。

風扇連接器 - 三個風扇連接器供三個通道使用。若要連接額外的風扇，請使用隨附的風扇分線器。
備註：風扇分線器上的第一個 4 針腳風扇連接器將是主要風扇。請勿在同一個通道中混用 PWM 或 3 針腳風扇。
RGB LED 接頭 - 一個LED燈條已預先安裝於機殼內。通過頂部LED燈條末端的連接頭連接額外的HUE 2 LED燈條。 若要連接Aer RGB 2風扇，請直接連接到第二個RGB通道。
電源連接器 - 連接至電源供應器，為智慧裝置、風扇及 LED 燈條供電和啟用。
備註：電腦電源開啟時，請勿連接。

CABLE CONNECTIONS

DISCO DE ADMINISTRACIÓN DE CABLES
CONNEXIONS DES CÂBLES
KABELVERBINDUNGEN
COLLEGAMENTI DEI CAVI
LIGAÇÕES DE CABOS
ПОДКЛЮЧЕНИЕ КАБЕЛЕЙ
케이블 연결
ケーブル接続
线缆连接
線路連接

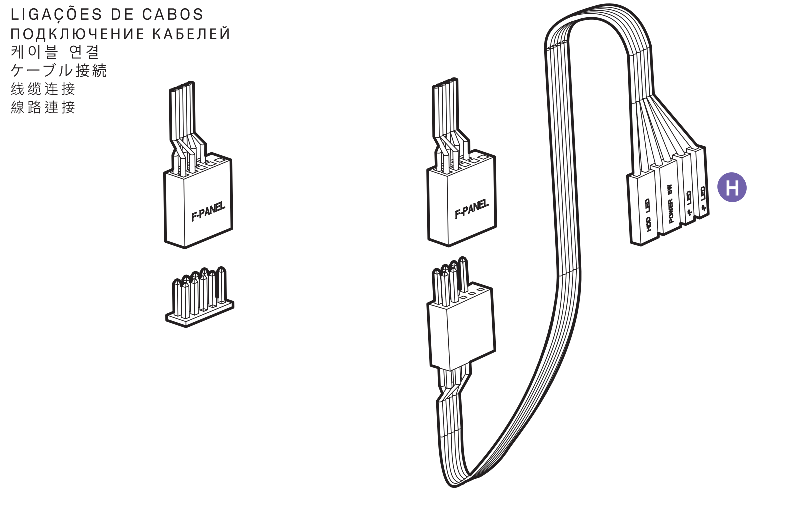

FOR INTEL STANDARD F_PANEL HEADER USE

FOR NON-INTEL STANDARD F_PANEL HEADER USE

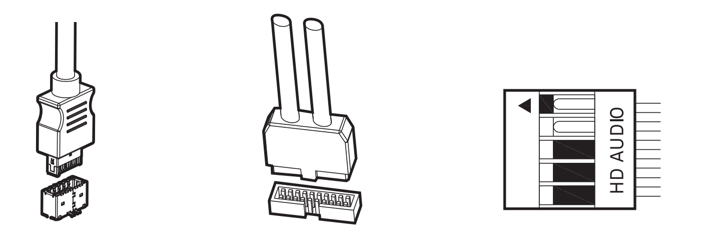

USB3.1 GEN 2

USB 3.1 GEN 1

HD AUDIO

BUTTONS AND I/O

BOTONES Y E/S
BOUTONS ET E/S
TASTEN UND E/A
PULSANTI E I/O
BOTÕES E E/S
КНОПКИ И РАЗЪЕМЫ ВВОДА/ВЫВОДА
버튼 및 I/O
ボタンおよび I/O
按钮和 I/O
按鈕和 I/O

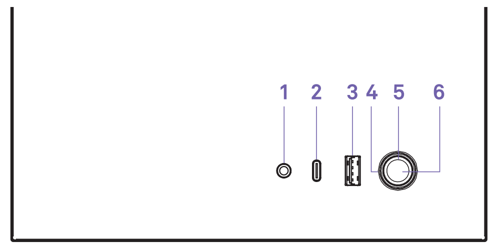

1. HD Audio Output
2. USB 3.1 Gen2 Type-C
3. USB 3.1 Gen1 Type-A
4. HDD LED
5. Power LED
6. Power switch

1. Salida de audio HD
2. USB 3.1 Gen2 Type-C
3. USB 3.1 Gen1 Type-A
4. LED de unidad de disco duro
5. LED de alimentación
6. Interruptor de encendido

1. Sortie audio HD
2. USB 3.1 Gen2 Type-C
3. USB 3.1 Gen1 Type-A
4. Témoin disque dur
5. Témoin d'alimentation
6. Interrupteur marche/arrêt

1. HD-Audioausgang
2. USB 3.1 Gen2 Type-C
3. USB 3.1 Gen1 Type-A
4. Festplatten-LED
5. Betriebs-LED
6. Netzschalter

1. Uscita audio HD
2. USB 3.1 Gen2 Type-C
3. USB 3.1 Gen1 Type-A
4. LED HDD
5. LED alimentazione
6. Interruttore d'alimentazione

1. Saída de áudio HD
2. USB 3.1 Gen2 Type-C
3. USB 3.1 Gen1 Type-A
4. LED do HDD
5. LED de alimentação
6. Interruptor de alimentação

1. Звуковой выход HD
2. USB 3.1 Gen2 Type-C
3. USB 3.1 Gen1 Type-A
4. Индикатор жесткого диска
5. Индикатор питания
6. Выключатель питания

1. HD 오디오 출력
2. USB 3.1 Gen2 Type-C
3. USB 3.1 Gen1 Type-A
4. HDD LED
5. 전원 LED
6. 전원 스위치

1. HDオーディオ
2. USB 3.1 Gen2 Type-C
3. USB 3.1 Gen1 Type-A
4. HDD LED
5. パワーLED
6. 電源スイッチ

1. 高清音频输出
2. USB 3.1 Gen2 Type-C
3. USB 3.1 Gen1 Type-A
4. HDD LED
5. 电源LED
6. 电源开关

1. 高清音頻輸出
2. USB 3.1 Gen2 Type-C
3. USB 3.1 Gen1 Type-A
4. HDD LED
5. 電源LED
6. 電源開關

PANEL REMOVAL

EXTRACCIÓN DE PANEL
RETRAIT DU PANNEAU
BLENDE ENTFERNEN
RIMOZIONE DEL PANNELLO
REMOÇÃO DOS PAINÉIS
СНЯТИЕ ПАНЕЛИ
패널 제거
パネルの取り外し
卸下面板
移除面板

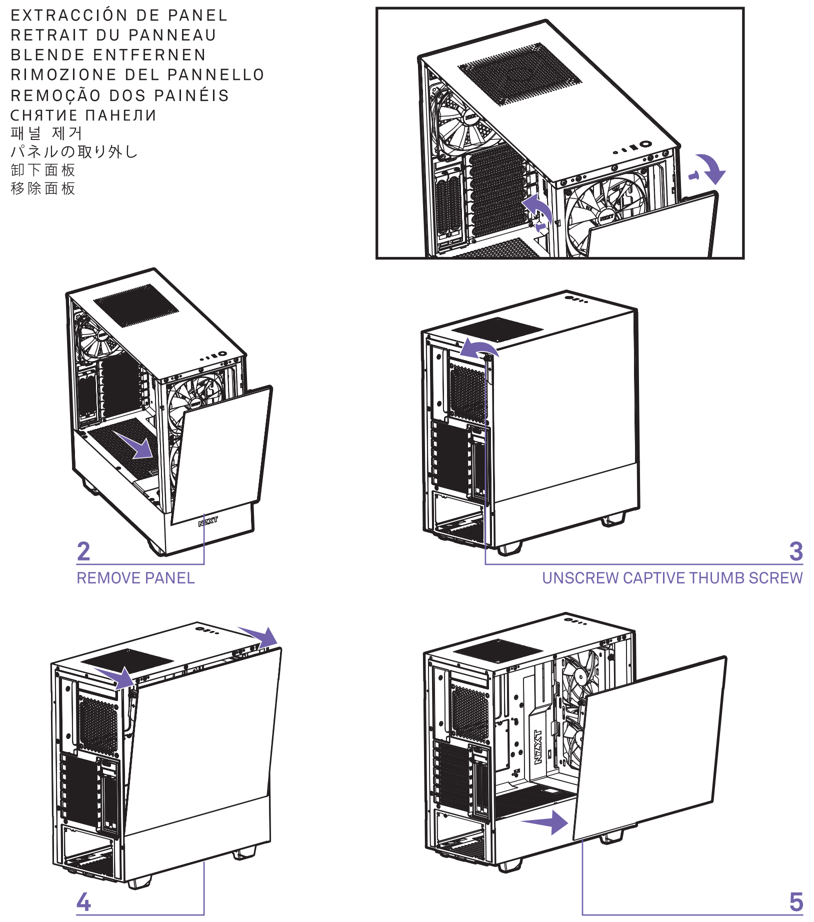

1 LOCATE AND REMOVE SCREWS

2 REMOVE PANEL

3 UNSCREW CAPTIVE THUMB SCREW

4 PULL TOP OF GLASS PANEL

5 LIFT AND REMOVE PANEL

CABLE MANAGEMENT SYSTEM

SISTEMA DE GESTIÓN DE CABLES
SYSTÈME DE CÂBLAGE
KABELMANAGEMENTSYSTEM
SISTEMA DI GESTIONE DEI CAVI
SISTEMA DE GERENCIAMENTO DE CABOS
СИСТЕМА ПРОКЛАДКИ КАБЕЛЕЙ
케이블 관리 시스템
ケーブルマネジメントシステム
理线管理系统
整線管理系統

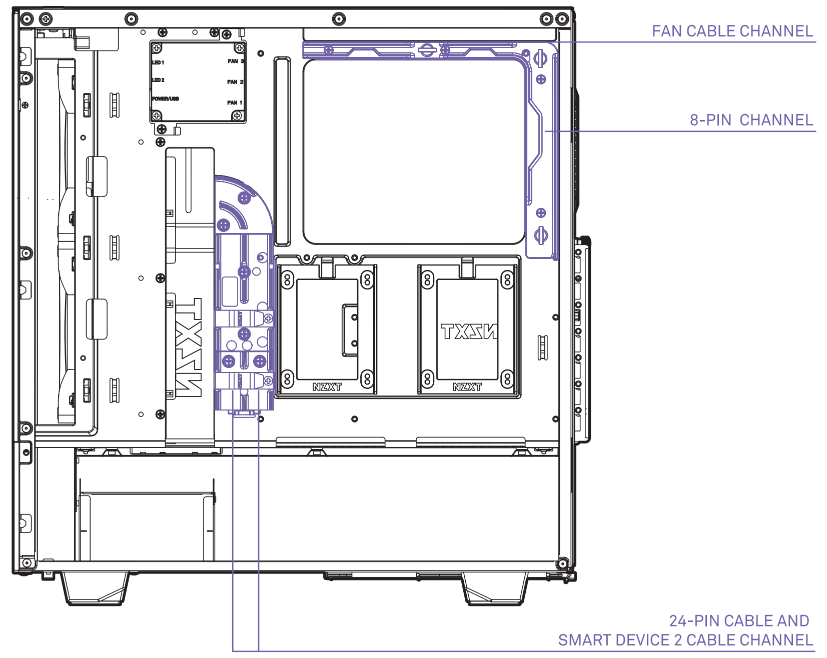

MOTHERBOARD INSTALLATION

INSTALACIÓN DE LA PLACA BASE
INSTALLATION DE LA CARTE MÈRE
INSTALLATION DER HAUPTPLATINE
INSTALLAZIONE DELLA SCHEDA MADRE
INSTALAÇÃO DA PLACA PRINCIPAL
УСТАНОВКА СИСТЕМНОЙ ПЛАТЫ
마더보드 설치
マザーボードの装着
主板安装
主機板安裝

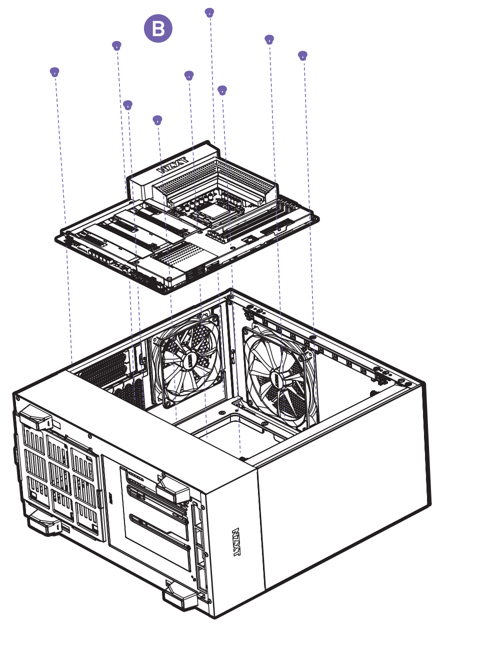

POWER SUPPLY INSTALLATION

INSTALACIÓN DE LA FUENTE DE ALIMENTACIÓN
INSTALLATION DE L'ALIMENTATION
INSTALLATION DER STROMVERSORGUNG
INSTALLAZIONE DELL'ALIMENTATORE
INSTALAÇÃO DA FONTE DE ALIMENTAÇÃO
УСТАНОВКА ИСТОЧНИКА ПИТАНИЯ
전원공급장치 설치
電源の装着
电源安装
電源安裝

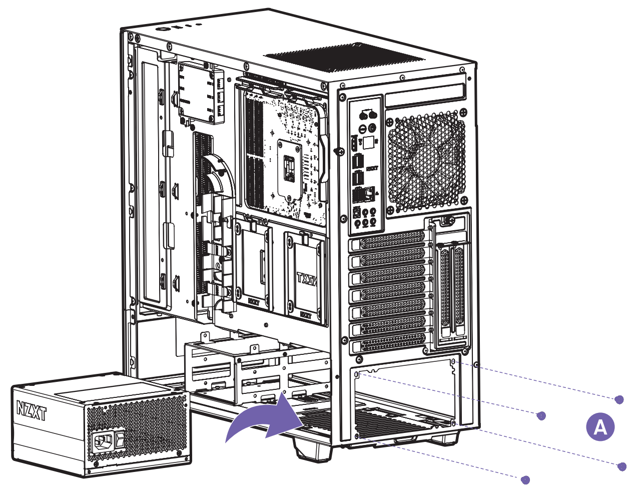

IMPORTANT!
Install the PSU with the fan facing down.

EXPANSION CARD INSTALLATION

INSTALACIÓN DE LA TARJETA DE EXPANSIÓN
INSTALLATION DE LA CARTE D'EXTENSION
INSTALLATION DER ERWEITERUNGSKARTE
INSTALLAZIONE DELLA SCHEDA D'ESPANSIONE
INSTALAÇÃO DA PLACA DE EXPANSÃO
УСТАНОВКА ПЛАТЫ РАСШИРЕНИЯ
확장 카드 설치
拡張カードの装着
扩展卡安装
擴充卡安裝

UNSCREW THE THUMB SCREW

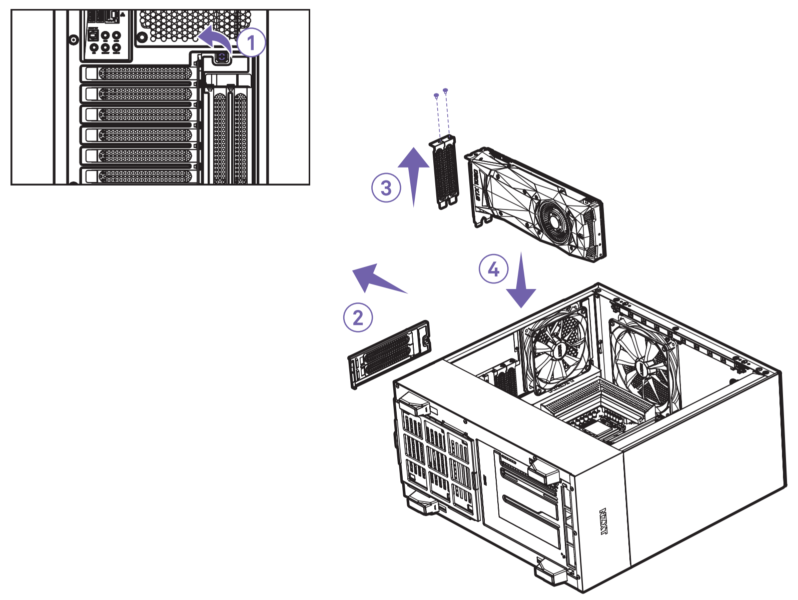

HORIZONTAL GPU MOUNT

UNSCREW THE THUMB SCREW

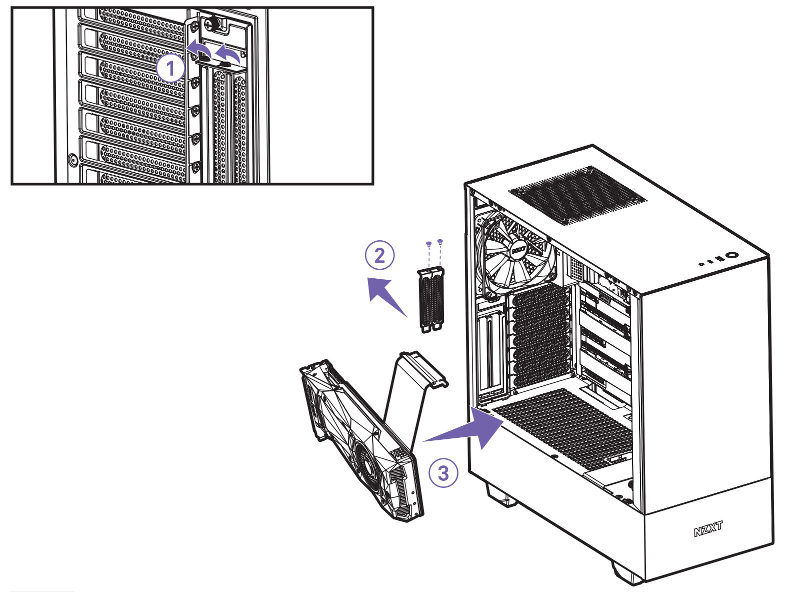

VERTICAL GPU MOUNT

HDD DRIVE INSTALLATION

INSTALACIÓN DE LA UNIDAD DE DISCO DURO
INSTALLATION DE LECTEUR HDD
HDD-LAUFWERKSINSTALLATION
INSTALLAZIONE DELL'UNITÀ HDD
INSTALAÇÃO DA PLACA DE EXPANSÃO
УСТАНОВКА ЖЕСТКОГО ДИСКА
HDD 드라이브 설치
HDD装着
HDD 驱动器安装
硬碟安裝

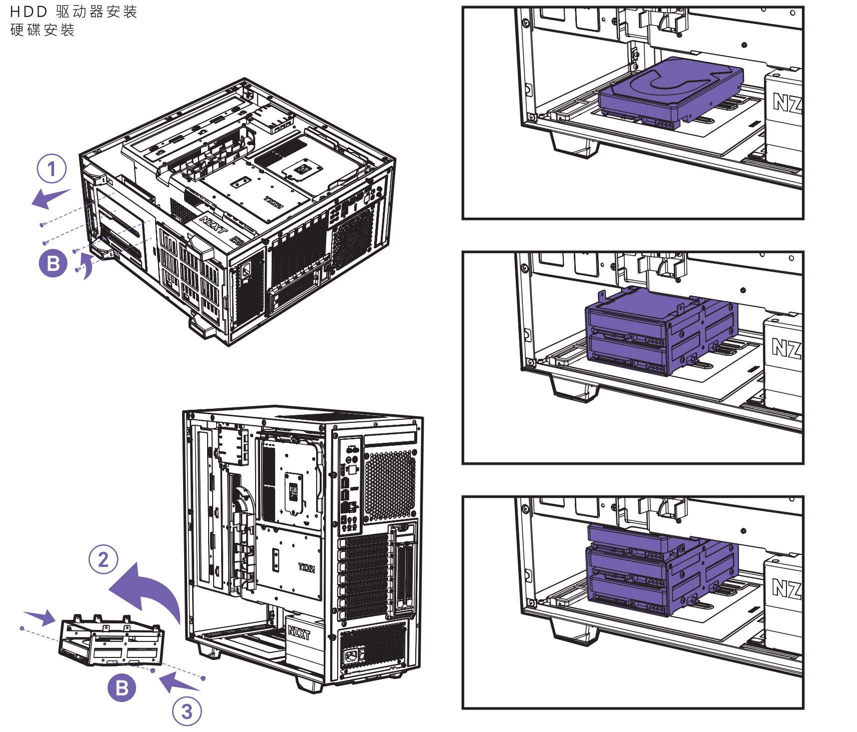

SSD DRIVE INSTALLATION

INSTALACIÓN DE LA UNIDAD DE DISCO DE ESTADO SÓLIDO
INSTALLATION DU DISQUE SSD
SSD-LAUFWERKSINSTALLATION
INSTALLAZIONE DELL'UNITÀ SDD
INSTALAÇÃO DA PLACA DE EXPANSÃO
УСТАНОВКА ТВЕРДОТЕЛЬНОГО НАКОПИТЕЛЯ
SSD 드라이브 설치
SSD装着
SSD 驱动器安装
SSD安裝

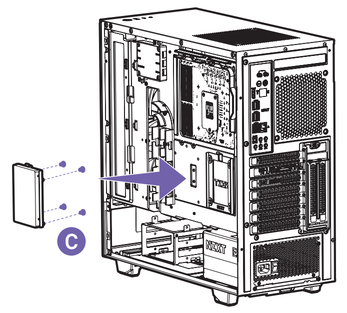

VERTICAL MOUNT

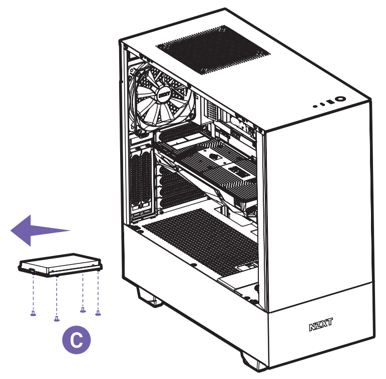

HORIZONTAL MOUNT

DIY LIQUID COOLER SUPPORT

HAZLO TÚ MISMO: SOPORTE PARA REFRIGERADOR LÍQUIDO
SUPPORT DE REFROIDISSEMENT LIQUIDE À ASSEMBLER VOUS-MÊME
WASSERKÜHLUNG MARKE EIGENBAU
SUPPORTO PER DISSIPATORE A LIQUIDO FAI-DA-TE
SUPORTE A REFRIGERAÇÃO LÍQUIDA DIY
ПОДДЕРЖКА САМОСТОЯТЕЛЬНОЙ СБОРКИ ЖИДКОСТНОЙ СИСТЕМЫ ОХЛАЖДЕНИЯ
DIY 수냉식 쿨러 지원
水冷クーラー支持部の DIY
DIY 液体冷却器支持
DIY 水冷支援

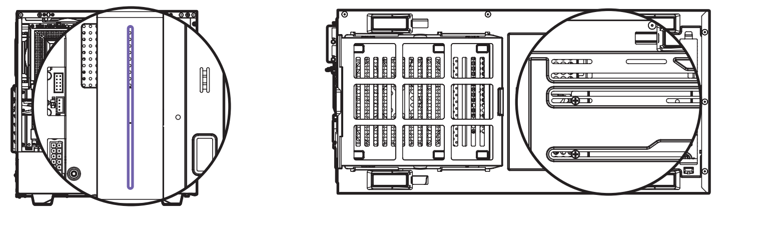

The Cable Bar could support up to 150mm tall tube reservoir with M4 screws
The bottom Panel could support D5 or DDC pump mount with M4 screws

La barra para cables podría soportar un depósito de tubo de hasta 150 mm de alto con tornillos M4
El panel inferior podría soportar el montaje de una bomba D5 o DDC con tornillos M4

La barre de gestion des câbles peut supporter un réservoir d'une hauteur maximale de 150 mm avec des vis M4
Le panneau inférieur peut supporter un montage de pompe D5 ou DDC avec des vis M4

Die Kabelschiene bietet Platz für einen bis zu 150 mm hohen Rohrbehälter mit M4-Schrauben
Die untere Abdeckung bietet Platz für eine D5- oder DDC-Pumpenhalterung mit M4-Schrauben

La barra dei cavi supporta un serbatoio tubolare alto fino a 150 mm con viti M4
Il pannello inferiore supporta il montaggio della pompa D5 o DDC con viti M4

A barra de limpeza pode suportar um reservatório de tubos alto de 150 mm com parafusos M4
O painel inferior pode suportar montagem de bomba D5 ou DDC com parafusos M4

На кабельную панель можно устанавливать трубчатый резервуар высотой до 150 мм с помощью винтов M4
На нижнюю панель можно устанавливать насос D5 или DDC с помощью винтов M4

케이블 바는 M4 나사로 최대 150mm 높이의 튜브 물통을 지지할 수 있습니다
하단 패널은 M4 나사로 D5 또는 DDC 펌프 마운트를 지지할 수 있습니다

ケーブルバーで、M4 ネジで高さが最大 150mm のチューブ式水タンクを支える必要があります
ボトムパネルには、M4 ネジで D5 または DDC ポンプを取り付ける必要があります

线缆条可以用 M4 螺丝支撑高达 150 毫米的高管容器
底部面板可以用 M4 螺丝支持 D5 或 DDC 泵安装

纜線桿使用 M4 螺絲，可以支撐最高 150mm 的蓄水管
底部面板使用 M4 螺絲，可以支撐 D5 或 DDC 泵安裝座

FAN AND RADIATOR SUPPORT

COMPATIBILIDAD DE VENTILADORES Y RADIADORES
PRISE EN CHARGE DES RADIATEURS ET VENTILATEURS
LÜFTER- UND KÜHLER-UNTERSTÜTZUNG
SUPPORTO VENTOLE E RADIATORE
SUPORTE PARA VENTOINHA E A RADIADOR
СОВМЕСТИМЫЕ РАДИАТОР И ВЕНТИЛЯТОР
팬 및 라디에이터 지원
対応ファンおよびラジエータ
风扇和散热器支持
風扇和散熱排支援

RADIATOR MODE

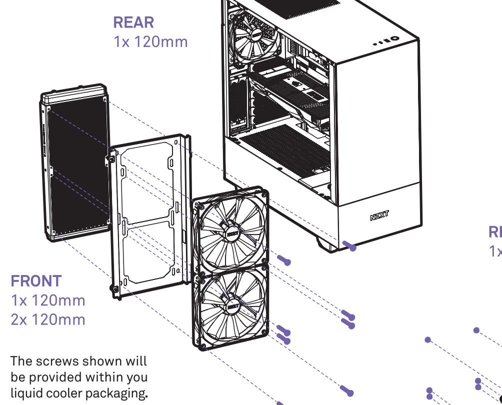

The screws shown will be provided within you liquid cooler packaging.

FAN MODE

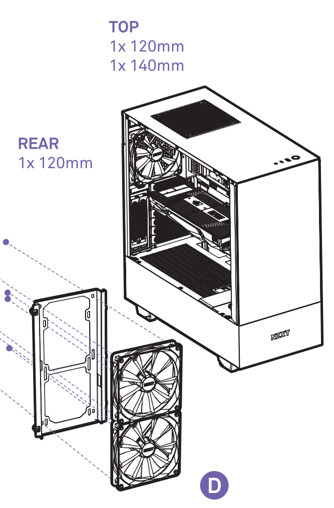

限用物质及元素列表/限用物質及元素清單

产品名称：机箱・H系列						
	有害物质					
部件名称	铅 (Pb)	汞(Hg)	镉 (Cd)	六价铬 (Cr^{+6})	多溴联苯 (PBB)	多溴联苯醚 (PBDE)
PCBA及板上元件	○	○	○	○	○	○
连接器	○	○	○	○	○	○
线材	○	○	○	○	○	○
金属结构件	○	○	○	○	○	○
塑胶结构件	○	○	○	○	○	○
风扇	○	○	○	○	○	○
涂料	○	○	○	○	○	○
包装及缓冲材料	○	○	○	○	○	○
纸类及印刷品	○	○	○	○	○	○

本表格依据SJ/T 11364的规定编制。
○: 表示该有害物质在该部件所有均质材料中的含量均在GB/T 26572规定的限量要求下。
X: 表示该有害物质至少在该部件的某一均值材料中的含量超出GB/T 26572官定的限量要求。

產品名稱：機箱：H系列						
	限用物質及其化學符號					
單元	铅 (Pb)	汞(Hg)	鎘 (Cd)	六價鉻 (Cr^{+6})	多溴聯苯 (PBB)	多溴二苯醚 (PBDE)
PCBA及板上元件	○	○	○	○	○	○
連接器	○	○	○	○	○	○
線材	○	○	○	○	○	○
金屬結構件	○	○	○	○	○	○
塑膠結構件	○	○	○	○	○	○
風扇	○	○	○	○	○	○
塗料	○	○	○	○	○	○
包裝及緩衝材料	○	○	○	○	○	○
紙類及印刷品	○	○	○	○	○	○

備考1. "超出0.1 wt%"及"超出0.01 wt%"係指限用物質之百分比含量超出百分比含量基準值。
備考2. "○"係指該項限用物質之百分比含量未超出百分比含量基準值。
備考3. " - "係指該項限用物質為排除項目。

REGULATIONS

This personal computer case with the smart device is tested to comply with FCC standard, Australian standard and EU EMC Directive (2014/30/EU)
CAN ICES-3(B) / NMB-3(B)
This Class B personal computer case with smart device complies with Canadian ICES-003
Cet étui pour ordinateur personnel de classe B avec dispositif intelligent est conforme à la norme NMB-003 du Canada

NZXT GLOBAL WARRANTY POLICY

This NZXT Global Warranty Policy governs the sale of products by NZXT to you.

I. WARRANTY LENGTH

New NZXT Product	Warranty Length for Parts
Computer Cases	2 Years
Temperature Meters	2 Years
Fans	2 Years
Lighting	2 Years
Accessories	2 Years
Kraken M Coolers	3 Years
Power Supply	10 Years
Kraken X/Z Coolers	6 Years
Mini ITX Case with PSU, AIO, and Riser Card	3-year warranty on case, riser card, and AIO. 10-year warranty on PSU.

Refurbished NZXT Product	Warranty Length for Parts
All NZXT Certified Refurbished Products	1 Years

Any replacement product will be covered under warranty for the remainder of the warranty period or thirty days, whichever is longer. Proof of purchase is required for warranty service.

II. WHO IS PROTECTED

The Warranty covers only NZXT products purchased by the original consumer.

III. WHAT IS AND IS NOT COVERED

Please note that our warranty is not an unconditional guarantee. If the product, in NZXT's reasonable opinion, malfunctions within the warranty period, NZXT will provide you at its sole discretion with a repaired or replacement product, either new or refurbished, with a similar function that is equal or greater in value depending on supply. Our warranty does not cover the following:

- any product or serial number/warranty sticker modification applied without permission from NZXT;
- any damage that is not a manufacturing defect;
- damage, deterioration or malfunction resulting from: accident, abuse, misuse, neglect, fire, water, lightning, or other acts of nature, unauthorized product modification or failure to follow instructions included with the product;
- improper installation, unauthorised alterations or modifications, or repair or attempted repair by anyone not authorized by NZXT;
- shipping or transport damage (claims must be made with the carrier); and
- normal wear and tear.

NZXT does not warrant that this product will meet your requirements. It is your responsibility to determine the suitability of this product for your purpose. For NZXT Store orders, we cover two way return shipping for all exchanges and returns. For all other authorized dealers, NZXT Support does not cover return shipping and only covers one way shipping from NZXT back to the end user for exchanges. Two way expedited shipping is provided for all PSUs covered under the Less Than Three program, indiscriminate of purchase location, provided the location is an approved NZXT reseller.

IV. EXCLUSION OF DAMAGES (DISCLAIMER)

NZXT's sole obligation and liability under this warranty is limited to the repair or replacement of a defective product with either a new or refurbished product with a similar function that is equal or greater in value at our option. NZXT shall not, in any event, be liable for any incidental or consequential damage, including but not limited to damages resulting from interruption of service and loss of data, business, or for liability in tort relating to this product or resulting from its use or possession.

V. LIMITATIONS OF IMPLIED WARRANTIES

There are no other warranties, expressed or implied, including but not limited to those of merchantability or fitness for a particular purpose. The duration of implied warranties is limited to the warranty length specified in Paragraph I.

VI. TO OBTAIN TECHNICAL SUPPORT

If you have already referenced your product owner's manual and still need help, you may contact us by phone at +1 (800) 228-9395, by email at service@nzxt.com, or visit the NZXT Support site at https://www.nzxt.com/customer-support.

VII. HOW TO OBTAIN A WARRANTY SERVICE FROM NZXT

To receive a warranty service for your product when purchased directly from NZXT, you must submit a request via the NZXT Support site outlining the problem. If a technician deems the product defective or requiring testing, you will be required to provide a copy of your proof of purchase, which will enable you to submit a Return Merchandise Authorization "RMA" request.

Once approved, you`ll receive an RMA number, upon which you will be asked to ship the defective item back to NZXT with the RMA number clearly marked or labelled on the package. NZXT recommends that appropriate measures are taken to safeguard the product from damage during shipping.

VIII. APPLICABLE LAW AND ADDITIONAL LEGAL RIGHTS FOR CONSUMERS

This warranty gives you specific legal rights. These conditions are governed and construed in accordance with the laws of California (with exception of its conflict of law provisions), and the application of the United Nations Convention of Contracts for the International Sale of Goods is expressly excluded. The non-exclusive jurisdiction of the courts of California is agreed, which means that you may bring a claim to enforce your consumer protection rights in connection with this Global Warranty in the country which you have your habitual residence where you may have additional rights. These rights may vary.

For original consumers who are covered by consumer protection laws or regulations in their country, state, or province of purchase or, if different, their country, state, or province of residence, the benefits conferred by this warranty are in addition to all rights and remedies conveyed by such consumer protection laws and regulations. To the extent that liability under such consumer laws can be limited, NZXT's liability is limited, and its sole option, to repair or replacement, either new or refurbished, with a similar function that is equal or greater in value depending on supply.

In the United Kingdom:

- For NZXT products sold to customers in the UK, during the expected lifespan of your product your legal rights entitle you to the following:
  - > Up to 30 days: if your goods are faulty, then you can get an immediate refund.
  - > Up to six months: if your goods can't be repaired or replaced, then you're entitled to a full refund, in most cases.
  - > Up to six years: if your goods do not last a reasonable length of time you may be entitled to some money back.
- If the person seeking to rely on the guarantee is not the original consumer, the NZXT Warranty will cover the product in relation to that person provided that they are able to provide proof of the transfer of the benefit of the guarantee from the original consumer.
- The implied warranties under the Consumer Rights Act 2015 says that your goods must be as described, fit for all purposes for which such goods are usually supplied, and of satisfactory quality.

In the EU:

- If you are a consumer and have your habitual residence in the EU, you additionally enjoy the protection afforded to you by provisions that cannot be derogated from by agreement by virtue of the law where you have your habitual residence.

IX. WARRANTY SERVICE FROM RESELLERS

In the event that a warranty service is sought, you must provide proof of purchase (store receipt or invoice) in order to receive the service and if deemed necessary, repair or replacement product.

In North America:
Within the first 60 days after purchase, please return your product (or for power supplies installed within our enclosures, just the failed power supply) to your dealer or reseller for a replacement. If the product is still within warranty and you can no longer return it to your dealer, please contact NZXT Customer Support (see above) for assistance and instructions. NZXT will not accept returns without prior approval and an RMA number.

In Europe:
Within the first year after purchase, please return your product (or for power supplies installed within our enclosures, just the failed power supply) to your dealer or reseller for a replacement. If the product is still within warranty and you can no longer return it to your dealer, please contact NZXT Customer Support (see above) for assistance and instructions. NZXT will not accept returns without prior approval.

In Australasia:
Within the first two years after purchase, please return your product (or for power supplies installed within our enclosures, just the failed power supply) to your dealer or reseller for a replacement. If the product is still within warranty and you can no longer return it to your dealer, please contact NZXT Customer Support (see above) for assistance and instructions. NZXT will not accept returns without prior approval.
The cost of shipping will be borne at the first instance by you; however, if the purchased item is defective, NZXT will reimburse reasonable postage or transportation of costs.

Outside North America, Europe, and Australasia:
If your product needs to be returned within the warranty period, please contact the retailer or distributor from whom you purchased the product.

X. NZXT.COM STORE RETURNS/EXCHANGE POLICY

Eligible products under this NZXT Warranty qualify for a full refund or exchange only with an authorized RMA number and if the item is returned to the NZXT.com store inventory within 30 days of purchase. Returns are not allowed beyond 30 days of the purchase date. The NZXT.com Store reserves the right to deny any return or exchange. Refunds will be credited to the original method of payment. To initiate a return, simply submit a request via NZXT support site.

SUPPORT AND SERVICE

Support and service

If you have any questions or problems with the NZXT product you purchased, please don't hesitate to contact us using our support system. support.nzxt.com
Please include a detailed explanation of your problem and your proof of purchase. For comments and suggestions, you can e-mail our design team, designer@nzxt.com. Lastly we would like to thank you for your support by purchasing this product. For more information about NZXT, please visit us online. NZXT Website: nzxt.com

Soporte y servicio

Si tiene preguntas o problemas con el producto NZXT que usted compró, no dure en ponerse en contacto con service@nzxt.com y suministrar una explicación detallada de su problema así como su prueba de compra. Puede hacer consultas sobre piezas de repuesto en support.nzxt.com. Para comentarios y sugerencias, escriba un mensaje de correo electrónico a nuestro equipo de diseño: designer@nzxt.com. Gracias por comprar un producto NZXT. Para más información acerca de NZXT, visítenos en línea. Página web de NZXT: nzxt.com

Support et service

Si vous avez des questions ou des problèmes avec le produit NZXT que vous avez acheté, n'hésitez pas à contacter service@nzxt.com avec une description détaillée de votre problème et votre preuve d'achat. Vous pouvez aussi commander des pièces de remplacement auprès support.nzxt.com. Pour les commentaires et les suggestions, envoyez un email à notre équipe de design, designer@nzxt.com. Merci d'avoir acheté ce produit de NZXT. Pour plus d'informations sur NZXT, visitez notre site Web. Site Web de NZXT : nzxt.com

Kundendienst und service

Falls Fragen oder Probleme bezüglich Ihres NZXT-Produktes auftreten, wenden Sie sich bitte mit einer detaillierten Problembeschreibung und Ihrem Kaufbeleg an service@nzxt.com. Ersatzteile können Sie unter support.nzxt.com anfragen. Kommentare und Anregungen senden Sie bitte per designer@nzxt.com an unser Designteam. Vielen Dank, dass Sie ein NZXT-Produkt erworben haben. Weitere Informationen über NZXT erhalten Sie im Internet. NZXT-Webseite: nzxt.com

Assistenza e servizio

In caso di dubbi o problemi con il prodotto NZXT acquistato, non esitate a contattarci utilizzando il nostro sistema di assistenza. support.nzxt.com
Includere una spiegazione dettagliata del problema e la prova di acquisto. Per commenti e suggerimenti, siete pregati di inviare un messaggio al nostro team di progettisti, all'indirizzo: designer@nzxt.com. Infine, vogliamo ringraziarvi del vostro supporto con l'acquisto di questo prodotto. Per altre informazioni su NZXT, visitate il nostro sito. Sito NZXT: nzxt.com

Assistência e manutenção

Caso tenha questões ou problemas com o produto NZXT adquirido, não hesite em contactar-nos através do endereço service@nzxt.com fornecendo a explicação detalhada do seu problema e a prova de compra. Poderá solicitar peças de substituição através do endereço support.nzxt.com. Para comentários e sugestões, contacte a nossa equipa de design através do endereço de e-mail, designer@nzxt.com. Obrigado por ter adquirido um produto NZXT. Para mais informações acerca da NZXT, visite-nos online. Web site da NZXT: nzxt.com

Служба поддержки и обслуживания

В случае возникновения вопросов или неисправностей в приобретенных вами продуктах NZXT обращайтесь по адресу: service@nzxt.com с подробным описанием проблемы и подтверждением покупки. О наличии запчастей можно узнать, обратившись по адресу: support.nzxt.com. Замечания и предложения отправляйте в адрес нашей группы разработчиков: designer@nzxt.com. Благодарим вас за покупку продукта NZXT. Более подробная информация о компании NZXT представлена на наших веб-сайтах. Веб-сайт NZXT: nzxt.com

지원 및 서비스

구입한 NZXT 제품과 관련하여 질문 또는 문제가 있을 경우, 당사의 지원 시스템(support.nzxt.com)을 사용하여 문의하십시오. 문제를 자세히 기술하고 구매 증빙을 제출하십시오. 의견 또는 제안 사항이 잇을 경우 당사 설계 팀에 designer@nzxt.com으로 이메일을 보내십시오. 마지막으로 이 제품을 구입하여 당사를 응원해 주셔서 감사합니다. NZXT에 대해 자세히 알려면 온라인으로 방문하십시오. NZXT 웹사이트: nzxt.com

サポートおよびサービス

購入されましたNZXTの製品に関するご質問または問題は、問題の詳細および購入の証明を添えて、ご遠慮なくservice@nzxt.comまでご連絡ください。 交換部品はsupport.nzxt.comまでお尋ねください。ご意見およびご提案は弊社設計チーム、designer@nzxt.com までメールを送信してください。NZXT製品をご購入いただきましてありがとうございます。 NZXTに関する詳細は、インターネット上のウェブサイトをご覧ください。NZXT ウェブサイト: nzxt.com

支持和服务

如果有任何疑问或者在使用 NZXT 产品的过程中遇到任何问题,欢迎联络 service@nzxt.com,联络时请提供关于问题的详细说明及购买凭证。您可以向 support.nzxt.com 查询更换部件。如有任何意见或建议,欢迎致信我们的设计团队,电子邮件地址是 designer@nzxt.com。感谢您购买 NZXT 产品。有关 NZXT 的更多信息,请造访我们的在线网站。NZXT 网站：nzxt.com

支援和服務

如果在使用NZXT 產品的過程中有遇到任何問題或疑問，歡迎聯繫 service@nzxt.com， 並請提供問題的詳細敘述及購買證明。您可以透過 support.nzxt.com 查詢更換部件。如有任何意見或建議，歡迎來信與設計團隊聯繫 designer@nzxt.com。最後，感謝您購買 NZXT 產品。有關 NZXT 的更多信息，請訪問我們的網站。NZXT 網站：nzxt.com

- Visit nzxt.com/warranty and support.nzxt.com for information on warranty coverage and service.
- Visite el sitio Web nzxt.com/warranty y support.nzxt.com para obtener información sobre la cobertura y el servicio de la garantía.
- Visitez nzxt.com/warranty et support.nzxt.com pour les informations de la couverture de la garantie et du service.
- Informationen zu Geltungsbereich und Service der Garantie finden Sie unter support.nzxt.com und nzxt.com/warranty.
- Visitare il sito nzxt.com/warranty e support.nzxt.com per informazioni sulla copertura e sul servizio della garanzia.
- Visite nzxt.com/warranty e support.nzxt.com para obter informações sobre a cobertura da garantia e assistência.
- Подробную информацию об условиях гарантийного обслуживания см. на веб-сайте nzxt.com/warranty и support.nzxt.com.
- 제품 보증 범위와 서비스 정보를 확인하시려면 http://nzxt.com/warranty 또는 http://support.nzxt.com 을 방문해 주시기 바랍니다.
- 保証範囲およびサービスに関する情報については、support.nzxt.comと nzxt.com/warrantyにアクセスしてください。
- 请造访 nzxt.com/warranty 和 support.nzxt.com 了解保修范围和服务的信息。
- 請訪問 nzxt.com/warranty 和 support.nzxt.com 了解產品保固範圍和更多服務訊息。

NZXT, Inc./ 15736 E Valley Blvd, City of Industry, CA 91744, USA
NZXT Europe GmbH/ Industriering Ost 66 | 47906 Kempen | Germany
+1 (800) 228-9395 / service@nzxt.com / nzxt.com

Ovaj dokument je originalno proizveden i objavljen od strane proizvođača, brenda NZXT, i preuzet je sa njihove zvanične stranice. S obzirom na ovu činjenicu, Tehnoteka ističe da ne preuzima odgovornost za tačnost, celovitost ili pouzdanost informacija, podataka, mišljenja, saveta ili izjava sadržanih u ovom dokumentu.

Napominjemo da Tehnoteka nema ovlašćenje da izvrši bilo kakve izmene ili dopune na ovom dokumentu, stoga nismo odgovorni za eventualne greške, propuste ili netačnosti koje se mogu naći unutar njega. Tehnoteka ne odgovara za štetu nanesenu korisnicima pri upotrebi netačnih podataka. Ukoliko imate dodatna pitanja o proizvodu, ljubazno vas molimo da kontaktirate direktno proizvođača kako biste dobili sve detaljne informacije.

Za najnovije informacije o ceni, dostupnim akcijama i tehničkim karakteristikama proizvoda koji se pominje u ovom dokumentu, molimo posetite našu stranicu klikom na sledeći link:

https://tehnoteka.rs/p/nzxt-kuciste-h510-elite-ca-h510e-b1-akcija-cena/